Leica CM3050 S

Cryostat

Instructions for Use

English

Order No.: 14044380101 - Revision M

Always keep this manual with the instrument.

Read carefully before working with the instrument.

CE

Version 2.3, Revision M - 02.2021

The information, numerical data, notes and value judgments contained in this Instructions for Use represent the current state of scientific knowledge and state-of-the-art technology as we understand it following thorough investigation in this field.

We are under no obligation to update the present Instructions for Use periodically and on an ongoing basis according to the latest technical developments, nor to provide our customers with additional copies, updates etc. of this Instructions for Use.

To the extent permitted in accordance with the national legal system as applicable in each individual case, we shall not be held liable for erroneous statements, drawings, technical illustrations etc. contained in this Instructions for Use. In particular, no liability whatsoever is accepted for any financial loss or other consequential damage caused by or related to compliance with statements or other information in this Instructions for Use.

Statements, drawings, illustrations and other information regarding the contents or technical details of the present Instructions for Use are not to be considered warranted characteristics of our products.

These are determined only by the contract provisions agreed between ourselves and our customers.

Leica reserves the right to change technical specifications as well as manufacturing processes without prior notice. Only in this way is it possible to continuously improve our technology and manufacturing techniques used in our products.

This document is protected under copyright laws. All copyrights to this documentation are held by Leica Biosystems Nussloch GmbH.

Any reproduction of text and illustrations (also of any parts thereof) by means of print, photocopy, microfiche, web cam or other methods – including all electronic systems and media – requires express prior permission in writing by Leica Biosystems Nussloch GmbH.

For the instrument serial number and year of manufacture, please refer to the nameplate on the back of the instrument.

Leica Biosystems Nussloch GmbH
Heidelberger Strasse 17 - 19
69226 Nussloch
Germany
Tel.: +49 - (0) 6224 - 143 0
Fax: +49 - (0) 6224 - 143 268
Web: www.LeicaBiosystems.com

Table of Contents

1. Important information 7

1.1 Symbols and their meanings 7
1.2 General 10
1.3 Instrument type 10
1.4 Designated use 11
1.5 Qualification of personnel 11

2. Safety 12

2.1 Safety notes 12
2.2 Integrated safety devices 13
2.2.1 Locking the handwheel 13
2.2.2 Centering the handwheel grip 14
2.2.3 Emergency stop function (instruments with sectioning motor only) 14
2.2.4 Safety guard 15
2.3 Safety instructions: handling and operation of the instrument 15
2.3.1 Transport and installation 15
2.3.2 Site requirements 16
2.3.3 Electrical connections 16
2.3.4 Handling microtome knives/blades 17
2.3.5 Safety guard/handwheel lock 17
2.3.6 Motorized sectioning 18
2.3.7 Defrosting/handling frozen tissue 18
2.3.8 Frozen parts of the instrument and frozen accessories 18
2.3.9 Infectious/radioactive material 18
2.3.10 Disinfection and cleaning 19
2.3.11 Removing/reinstalling the microtome 19
2.3.12 Display message dry microtome 20
2.3.13 Maintenance 20

3. Installation 21

3.1 Site requirements 21
3.1.1 General site requirements 21
3.1.2 Electrical connections 21
3.2 Unpacking and installation 21
3.2.1 Repacking 23
3.3 Available models 23
3.4 Standard delivery 23
3.5 Installing/inserting accessories 25
3.5.1 Installing the handwheel 25
3.5.2 Inserting the accessories 25
3.5.3 The footswitch 26
3.6 Prior to switching on the instrument 27

4. Instrument properties 28

4.1 Overview 28
4.2 Technical data 30

5. Operation 34

5.1 Operating the instrument for the first time 34
5.2 Switching on/fuses 34
5.3 Control panel 1 35
5.3.1 Key functions in control panel 1 36
5.3.2 Display functions in control panel 1 36
5.3.3 Display indications when switching on 37
5.3.4 Menu functions: setting parameters of refrigeration, time and preset counter 39
5.3.5 Status display 43
5.3.6 Indication of refrigeration state, section thickness setting and counters 45
5.4 Control panel 2 47
5.4.1 Selecting a sectioning mode/start and stop sectioning 48
5.4.2 Setting the sectioning window 49
5.4.3 Selecting sectioning speed 50
5.4.4 Emergency stop 51
5.4.5 Coarse feed keys 52
5.4.6 Trimming and sectioning functions - switching between trimming and sectioning 53
5.4.7 Setting the section thickness 53
5.5 Daily operation of the instrument 54
5.5.1 Freezing specimens onto specimen discs with quick-freeze shelf and stationary heat extractor . 54
5.5.2 Freezing specimens onto specimen discs with 90 ° prism (Instruments w/specimen cooling) 55
5.5.3 Optional accessories for freezing and for removing of frozen specimens 56
5.5.4 Inserting specimen discs into the specimen head 58
5.5.5 Specimen orientation 58
5.5.6 Trimming/sectioning 58
5.6 Finishing work 60
5.6.1 Daily routine steps 60
5.6.2 Switching off the instrument for a longer period of time 60
5.7 Defrosting 61
5.7.1 Automatic chamber defrost cycle 61
5.7.2 Manual chamber defrost cycle 62
5.7.3 Defrosting the specimen head (instruments with specimen cooling only) 63

6. Troubleshooting, application tips 64

6.1 Displayed error messages 64
6.1.1 Other error indications 65
6.2 Potential problems - causes and remedies 65
6.3 Reference chart for temperature settings (in minus °C) 69

7. Disinfection, cleaning and maintenance 70

7.1 Safety instructions on disinfection and cleaning 70
7.2 Cleaning 70
7.3 Disinfection at room temperature 70
7.4 Removing/reinstalling the microtome 71
7.4.1 Removing the microtome 71
7.4.2 Disassembling the specimen head (instruments w/specimen cooling only) 72
7.4.3 Reinstalling the microtome 74
7.4.4 Adjust the clamping force of the T-piece 74
7.5 Removing the sliding window 75
7.6 Replacement of LED illumination 75

8. Warranty and service **76**

9. Appendix **77**

9.1 Electrohydraulic height adjustment **77**
9.1.1 Designated use **77**
9.1.2 Standard delivery **77**
9.1.3 Safety instruction **77**
9.1.4 Installation **78**
9.1.5 Control keys **79**
9.1.6 Maintenance and care **80**
9.1.7 Troubleshooting **80**
9.1.8 Technical data **81**
9.2 Ordering information - accessories **81**

10. Decontamination Certificate **83**

1. Important information

1.1 Symbols and their meanings

Caution

Leica Biosystems GmbH assumes no liability for consequential loss or damage due to failure to observe the following instructions, particularly in relation to transportation and package handling, and failure to observe the instructions for handling the instrument carefully.

Symbol:	**Title of the symbol:**	Warning
	Description:	Warnings appear in a gray box and are marked by a warning triangle.
Symbol:	**Title of the symbol:**	Note
	Description:	Notes, i. e. important user information, appear in a gray box and are marked by an information symbol.
Symbol:	**Title of the symbol:**	Item number
→ "Fig. 7 - 1"	**Description:**	Item numbers for numbering illustrations. Numbers in red refer to item numbers in illustrations.
Symbol:	**Title of the symbol:**	Function key
Start	**Description:**	Function keys to be pressed on the instrument are displayed as capital letters and bold, black text.
Symbol:	**Title of the symbol:**	Software key and/or Display Messages
Ready	**Description:**	Software keys to be pressed on the display and/or messages on the display are displayed as bold, gray text.
Symbol:	**Title of the symbol:**	Caution
	Description:	Indicates the need for the user to consult the Instructions for Use for important cautionary information such as warnings and precautions that cannot, for a variety of reasons, be presented on the medical device itself.
Symbol:	**Title of the symbol:**	Warning, hot surface
	Description:	Instrument surfaces which become hot during operation are marked with this symbol. Avoid direct contact to prevent risk of burning.
Symbol:	**Title of the symbol:**	Warning, biological hazard
	Description:	Instrument parts close to this symbol may be contaminated with substances that pose a threat to the health. Avoid direct contact or use appropriate protective clothing.

Symbol:	**Title of the symbol:**	Warning, low temperature / freezing conditions
	Description:	Instrument parts close to this symbol are exposed to low temperatures / freezing conditions that pose a threat to the health. Avoid direct contact or use appropriate protective clothing, e.g. frost protection gloves.
Symbol:	**Title of the symbol:**	Manufacturer
	Description:	Indicates the manufacturer of the medical product.
Symbol:	**Title of the symbol:**	Manufacturing date
	Description:	Indicates the date when the medical device was manufactured.
Symbol:	**Title of the symbol:**	CE Compliance
	Description:	The CE marking is the manufacturer's declaration that the medical product meets the requirements of the applicable EC directives.
Symbol:	**Title of the symbol:**	In vitro diagnostic medical device
IVD	**Description:**	Indicates a medical device that is intended to be used as an in vitro diagnostic medical device.
Symbol:	**Title of the symbol:**	China ROHS
	Description:	Environmental protection symbol of the China RoHS directive. The number in the symbol indicates the "Environment-friendly Use Period" of the product in years. The symbol is used if a substance restricted in China is used in excess of the maximum permitted limit.
Symbol:	**Title of the symbol:**	WEEE Symbol
	Description:	The WEEE symbol, indicating separate collection for WEEE - Waste of electrical and electronic equipment, consists of the crossed-out wheeled bin (§ 7 ElektroG).
Symbol:	**Title of the symbol:**	Alternating current
Symbol:	**Title of the symbol:**	Article number
REF	**Description:**	Indicates the manufacturer's catalog number so that the medical device can be identified.
Symbol:	**Title of the symbol:**	Serial number
SN	**Description:**	Indicates the manufacturer's serial number so that a specific medical device can be identified.

Symbol:	**Title of the symbol:**	Consult Instructions for Use
	Description:	Indicates the need for the user to consult the Instructions for Use.
Symbol:	**Title of the symbol:**	Warning, risk of electric shock
	Description:	Instrument surfaces or areas which become energized during operation are marked with this symbol. Therefore, direct contact is to be avoided.
Symbol:	**Title of the symbol:**	Flammable freezing sprays prohibited
	Description:	This symbol alerts the user that the use of flammable freezing sprays in the cryostat chamber is prohibited due to explosion hazard.
Symbol:	**Title of the symbol:**	IPPC symbol
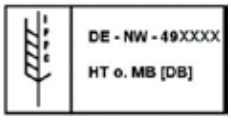	**Description:**	The IPPC symbol includes IPPC symbol • Country code to ISO 3166, e.g. DE for Germany • Regional identifier, e.g. NW for North Rhine-Westphalia • Registration number, unique number beginning with 49. • Treatment method, e.g. HT (heat treatment)
Symbol:	**Title of the symbol:**	Fragile, handle with care
	Description:	Indicates a medical device that can be broken or damaged if not handled carefully.
Symbol:	**Title of the symbol:**	Store dry
	Description:	Indicates a medical device that needs to be protected from moisture.
Symbol:	**Title of the symbol:**	This way up
	Description:	Indicates correct upright position of the transport package.
Appearance:	**Indication:**	Tilt indicator
	Description:	Indicator to monitor whether the shipment has been transported and stored in upright position according to your requirements. With a pitch of 60° or more, the blue quartz sand flows into the arrow-shaped indicator window and sticks there permanently. Improper handling of the shipment is immediately detectable and can be proven definitively.

Note

Upon delivery of the instrument, the recipient must check that the tilt indicator is intact before unpacking. The responsible Leica representative must be notified in the case that the indicator has been triggered.

1.2 General

These Instructions for Use includes important instructions and information related to the operating safety and maintenance of the instrument.

The Instructions for Use is an important part of the product. It must be read carefully before using the instrument for the first time and must always be kept with the instrument.

If additional requirements, which exceed the scope of this Instructions for Use, are imposed by regulations and/or laws on accident prevention and environmental protection in the country of operation, appropriate instructions for compliance with such requirements must be added to this Instructions for Use.

Read this Instructions for Use carefully before attempting to use or operate the instrument.

Warning

Please pay particular attention to (→ p. 12 – 2. Safety).

Please read this information, even if you are already familiar with the operation and use of other Leica products.

1.3 Instrument type

All information given in this Instructions for Use applies only to the instrument type indicated on the title page.

A nameplate bearing the instrument serial number (SN) is attached to the back of the instrument.

Precise data for the various versions is specified in (→ p. 30 – 4.2 Technical data).

Required information for all inquiries:

For any inquiries please specify:

- Instrument type
- Serialnumber

1.4 Designated use

- The Leica CM3050 S is a powerful cryostat for routine as well as research applications in biology, medicine and industry.
- The instrument has been designed for rapid freezing and sectioning of tissue samples.
- The instrument has not been designed for unattended storage of tissue material.
- The instrument may only be operated within the scope of its designated use as described above and as per the instructions given in these Instructions for Use.

Any other use of the instrument is considered improper.

The Leica CM3050 S is also suitable for IVD (in vitro diagnostics).

1.5 Qualification of personnel

The Leica CM3050 S may only be operated by trained laboratory personnel.

All laboratory personnel designated to operate the instrument must carefully read the present Instructions for Use prior to starting work with the instrument. The instrument is intended for professional use only.

2. Safety

2.1 Safety notes

Warning

- The safety and caution notes in this chapter must be observed at all times. Be sure to read these notes even if you are already familiar with the operation and use of other Leica products.
- When working with cryostats, personal safety precautions must always be taken. It is mandatory to wear work safety shoes, safety and cut resistant gloves (→ p. 23 – 3.4 Standard delivery), a mask and safety goggles.
- Due to explosion hazard, the use of flammable freezing sprays inside the cryostat chamber, while the instrument is turned on, is prohibited.

These Instructions for Use include important instructions and information related to the operating safety and maintenance of the instrument.

The Instructions for Use are an important part of the product, and must be read carefully prior to startup and use and must always be kept near the instrument.

This instrument has been built and tested in accordance with the safety requirements for electrical equipment for measurement, control, and laboratory use.

Residual risks

The instrument has been designed and constructed with the latest state-of-the-art technology and according to recognized standards and regulations with regard to safety technology. Operating or handling the instrument incorrectly can place the user or other personnel at risk of injury or can cause damage to the instrument or other property. The machine may be used only as intended and only if all of its safety features are in proper working condition. Malfunctions that impede safety must be remedied immediately.

To maintain this condition and ensure safe operation, the user must observe all notes and warnings contained in these Instructions for Use.

Only original spare parts and permitted original accessories may be used.

Note

These Instructions for Use must be appropriately supplemented as required by the existing regulations on accident prevention and environmental safety in the operator's country.

The instrument's EC Declaration of Conformity can be found on the Internet at:

http://www.LeicaBiosystems.com

Warning

The protective devices on both instrument and components must neither be removed nor modified. Only service personnel qualified by Leica may repair the instrument and access the instrument's internal components.

2.2 Integrated safety devices

The instrument is equipped with the following safety devices:

- Handwheel lock
- Handwheel grip centering (instruments with sectioning motor only)
- Emergency stop function (instruments with sectioning motor only)
- Knife holder equipped with safety guard

The safety devices installed by the manufacturer of the instrument only constitute the basis of accident prevention. Operating the instrument safely is, above all, the responsibility of the owner, as well as the designated personnel who operate, service or repair the instrument. To ensure trouble-free operation of the instrument, make sure to comply with the following instructions and warnings.

2.2.1 Locking the handwheel

Warning

Always cover the cutting edge with the safety guard and lock the handwheel:

- Prior to doing any work on knife and/or specimen.
- Prior to exchanging specimens.
- During work breaks.

The handwheel can be locked in 2 positions:

- with the grip in the uppermost position (→ "Fig. 1-1"),
- with the grip in the lowest position (→ "Fig. 1-2").

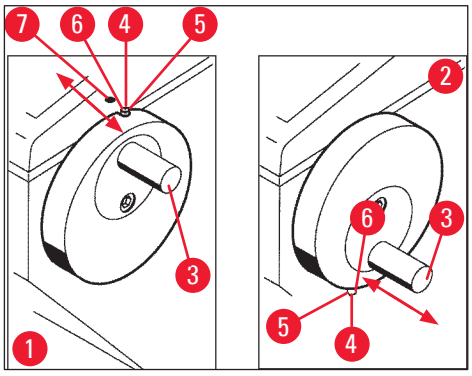

Fig. 1

Locking:

1. Rotate handwheel, until grip (→ "Fig. 1-3") is in upper (→ "Fig. 1-1") or lower position (→ "Fig. 1-2").
2. To lock, press pin (→ "Fig. 1-4") to the right into position (→ "Fig. 1-5").

ⓘ The upper locking position for pin (→ "Fig. 1-4") is marked by a black dot (→ "Fig. 1-7").

Instruments with sectioning motor:

The sectioning motor is now blocked.

All instruments:

The message **LOCKED** in the display of control panel 1 indicates that the handwheel has been locked:

C	T	-	3	0	°	C			O	T	-	3	5	°	C
					L	O	C	K	E	D				-	-

Unlocking:

1. To unlock, push locking pin (→ "Fig. 1-4") to the left into position (→ "Fig. 1-6").
2. Display indication **LOCKED** disappears.

Instruments with sectioning motor:

The sectioning motor can now be activated again.

2.2.2 Centering the handwheel grip

Warning

During motorized sectioning, for safety reasons always center the handwheel grip!

Center grip

1. To center grip (→ "Fig. 1-3"), pull outwards and pivot into center of handwheel.
2. When released, the grip locks into position.

2.2.3 Emergency stop function (instruments with sectioning motor only)

The emergency stop is activated via the red emergency stop button (→ "Fig. 2-3") in control panel 2 (→ "Fig. 2-1") or via the footswitch (→ "Fig. 2-2").

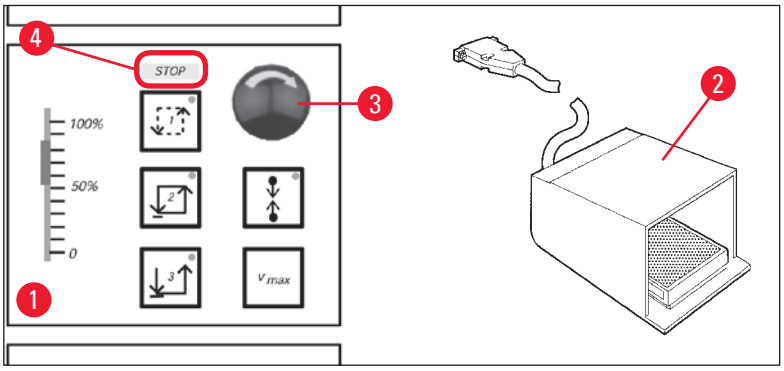

Fig. 2

Activating the emergency stop function

» Press emergency stop button (→ "Fig. 2-3") or step on footswitch forcefully (→ "Fig. 2-2"), STOP (red) (→ "Fig. 2-4") lights up.

✓ As soon as the emergency stop function is activated, the sectioning motor stops.

Deactivating the emergency stop

» To deactivate, rotate emergency stop button in direction of arrow (→ "Fig. 2-3").

Note

If the emergency stop function has been activated by the footswitch, unlocking is not necessary (function is unlocked as soon as the footswitch is released).

To continue work, select one of sectioning modes 1 - 3 and restart the sectioning motion.

2.2.4 Safety guard

All knife holders are equipped with a safety guard (--> see separate Instructions for Use on knife holders).

Warning

Always cover the cutting edge with the safety guard and lock the handwheel:

- Prior to doing any work on knife and/or specimen.
- Prior to exchanging specimens.
- During work breaks.

2.3 Safety instructions: handling and operation of the instrument

2.3.1 Transport and installation

Warning

To avoid severe damage to the instrument by running it while the compressor oil is displaced from its regular position:

- Do not tilt the instrument, only transport in an upright position.
- After transporting, do not turn the instrument on for a minimum of 4 hours.

To ensure proper function, the instrument must be set up with the following minimum clearance to walls and fixtures on all sides (→ p. 31 – Environmental specification).

The compressor oil may have been displaced during transport and must settle to its original position before switching the instrument on. Otherwise, the instrument may be severely damaged.

2.3.2 Site requirements

Warning

Do not operate in rooms with explosion hazard! To ensure proper function of the instrument, it must be set up with a minimum distance on all sides from walls and furniture (→ p. 15 – 2.3.1 Transport and installation).

The place of installation must meet the following requirements:

For space requirements and operating conditions see (→ p. 30 – 4.2 Technical data). All requirements listed in technical data must be met.

Note

Condensation water may form in the instrument if there is an extreme difference in temperature between the storage location and the installation site and if air humidity is high at the same time. If this is the case, wait at least four hours before switching on the instrument.

Failure to comply with this may cause damage to the instrument.

- The instrument is designed for indoor use only.
- The power plug/circuit breaker must be freely and easily accessible. The power socket may not be located further than 2.5 m from the instrument.
- Power supply at a distance no greater than the length of the power cable – an extension cable must NOT be used.
- The floor must be largely vibration-free and have sufficient load capacity and rigidity for the weight of the instrument.
- Avoid impacts, direct sunlight, and excessive temperature fluctuations.
- The instrument MUST be connected to a properly grounded socket. Use only the power cable provided, which is intended for the local power supply.
- The chemicals to be used are easily inflammable and hazardous to health. Therefore the installation location must be well ventilated, and must contain no sources of ignition of any kind.
- Furthermore, this instrument must NOT be operated directly under the outlet of an airconditioning system, since the increased air circulation accelerates icing of the chamber.
- The installation location must be protected against electrostatic charge.
- To ensure proper instrument function maintain the distances mentioned in (→ p. 15 – 2.3.1 Transport and installation) between walls and/or furniture and all sides of the instrument.

Note

Room temperatures and humidity levels in excess of the recommendations above will affect the cryostat's cooling capacity and the lowest stated temperatures will not be reached.

2.3.3 Electrical connections

- Before connecting the instrument to an AC power outlet, ensure that the AC power of your laboratory matches the values on the nameplate of the instrument.
- During the start-up of the refrigeration system, the minimum nominal voltage must not drop below the values specified in (→ p. 30 – 4.2 Technical data).

Warning

- The compressor draws a starting current between 25 A and 35 A.
- Therefore, the electric circuit at the place of installation must be inspected by an electrical engineer to ensure that it meets the requirements for a smooth operation of the instrument.
- A stable power supply in accordance with the instrument's specifications is essential to its proper functioning.

Failure to comply with the above can damage the instrument.

Fire hazard!

- Instrument malfunctions caused by voltage drop.

Electrical power supply deviating from specifications damages the instrument.

- During the start-up phase of the compressor, the nominal voltage must not drop below the values specified in (→ p. 30 – 4.2 Technical data)!
- Ensure uniform current supply according to specifications.
- Therefore, arrange for the electrical installations on site to be checked by a trained professional and make sure any necessary upgrades are installed!
- Have the circuit protected by a fuse of its own!
- Do not connect any other consumers to the same circuit.
- Prior to connecting the instrument to mains, make sure the electrical power supply in your laboratory corresponds to the values indicated on the instrument nameplate.
- No additional extension cable may be used.

2.3.4 Handling microtome knives/blades

Warning

Microtome knives and disposable blades have extremely sharp cutting edges and can cause serious injuries. Therefore:

- Handle knives / blades with utmost care.
- Wear cut resistant gloves (→ p. 23 – 3.4 Standard delivery).
- Never leave any knives / blades in unprotected places.
- Never place a knife, no matter where, with the cutting edge facing upwards.
- Never try to catch a falling knife.
- Always insert the specimen before inserting the knife.

2.3.5 Safety guard/handwheel lock

Warning

Always cover the cutting edge with the safety guard and lock the handwheel:

- Wear cut resistant gloves (→ p. 23 – 3.4 Standard delivery).
- Prior to doing any work on knife and/or specimen.
- Prior to exchanging specimens.
- During work breaks.

2.3.6 Motorized sectioning

Warning

Do not interrupt sectioning / trimming by setting the sliding potentiometer to zero speed.

Risk of injury!

- This does not really switch the sectioning function off - it only operates at '0' speed.

If the sliding potentiometer is accidentally moved, the instrument will resume sectioning immediately.

During motorized sectioning, always center the handwheel grip.

2.3.7 Defrosting/handling frozen tissue

Warning

Never leave specimens unattended in the cryochamber over an extended period of time!

- In case of power failure or instrument failure, or during the automatic defrost cycle, tissue material can be destroyed.

During the defrost cycle the cryochamber is partially warmed. Therefore:

- Remove sensitive specimens from the chamber prior to defrosting.
- If automatic defrosting is programmed to take place during the night, remember to remove all specimens from the cryochamber prior to leaving work.

2.3.8 Frozen parts of the instrument and frozen accessories

Warning

Wear protective gloves.

- Prolonged contact of bare skin to frozen surfaces of the instrument or to frozen accessories (specimen discs, knife holder, shelves etc.) can cause freezer burn.

2.3.9 Infectious/radioactive material

Warning

Risk of infection!

Use caution when working with potentially infectious specimens.

When working with potentially infectious/radioactive specimens:

- Wear protective clothes (gloves, protective boots, mask, lab coat), in compliance with radiation safety regulations and/or in-house regulations on handling infectious/radioactive material.

When working with radioactive specimens:

- Comply with applicable radiation safety regulations.
- Dispose of radioactive specimen waste according to applicable regulations.

2.3.10 Disinfection and cleaning

Warning

- Only use alcohol-based disinfectants for disinfecting the cryostat chamber.
- Do not use solvents (xylene, acetone etc.) for cleaning or disinfection.
- Prior to disinfection with alcohol-based disinfectants, switch the instrument off and unplug it from mains. For removal of the microtome from the cryostat chamber see (→ p. 19 – 2.3.11 Removing/ reinstalling the microtome).
- When using detergents and disinfectants, observe the specifications of the respective manufacturer.
- Risk of explosion when using alcohol: Provide proper ventilation and ensure the instrument is switched off.
- Risk of icing - Disinfected accessories must be thoroughly dry when reinserting them into the chamber. Insure the chamber is completely dry before switching on the instrument.
- Dispose of waste liquids from disinfection/cleaning as well as of sectioning waste according to applicable regulations on disposal of special category waste.
- For disinfection at room temperature, refer to (→ p. 70 – 7.3 Disinfection at room temperature).

2.3.11 Removing/reinstalling the microtome

Note

Before removing the microtome:

- Switch instrument off.
- Unplug from mains.
- Place handwheel grip in lowest position and lock.

When removing the microtome, the specimen head must always be locked in the lowest position. Otherwise the upper part of the slot cover might be bent and consequently damaged!

Warning

When removing the microtome:

- Risk of freezer burn. Wear gloves when removing the microtome while it is still frozen.

On instruments with specimen cooling:

- Risk of freezer burn. Do not distort the refrigerating tube! If distorted it might break, causing extremely cold refrigerant to escape.

Before reinstalling the microtome:

- Microtome must be completely dry. Humidity in the interior of the microtome freezes and causes microtome malfunctions and/or damage to the microtome.
- Risk of icing. All accessories/tools removed from the cryochamber must be thoroughly dry before putting them back into the chamber!

2.3.12 Display message dry microtome

If the error message **Dry Microtome** is displayed in control panel 1, the following has happened:

- Cryochamber refrigeration has been interrupted for an extended period of time (e.g. power failure), causing the chamber temperature to rise into the positive digits.

Note

If this message appears, do not switch on the instrument but remove the microtome from the chamber, disinfect, if necessary, and dry thoroughly before reinstalling it into the chamber, see (→ p. 70 – 7.1 Safety instructions on disinfection and cleaning) to (→ p. 71 – 7.4 Removing/ reinstalling the microtome).

2.3.13 Maintenance

Note

Only technical service engineers authorized by Leica may access the internal components of the instrument for service and repair.

3. Installation

3.1 Site requirements

Warning

Make sure to read and follow all safety instructions in (→ p. 16 – 2.3.2 Site requirements)! All requirements listed in (→ p. 30 – 4.2 Technical data) need to be met.

3.1.1 General site requirements

- No direct sunlight.
- Electrical power supply within distance. Length of power cord = approx. 3 meters - do not use extension cords! (→ p. 16 – 2.3.3 Electrical connections).
- No draft (caused by air conditioning etc.).
- Even floor surface.
- Practically vibration-free floor.
- Handwheel easily accessible.

Note

High ambient temperature and/or high air humidity negatively affect instrument cooling performance.

3.1.2 Electrical connections

Warning

Make sure to read and follow all safety instructions in (→ p. 16 – 2.3.3 Electrical connections).

3.2 Unpacking and installation

Note

Unpacking instructions are always located in a transparent protective envelope on the outside of the instrument shipping crate.

Warning

Make sure to read and follow all safety instructions provided in (→ p. 15 – 2.3.1 Transport and installation) and on the unpacking instructions.

Transport to the site:

1. First, check if the location meets the conditions specified in (→ p. 16 – 2.3.2 Site requirements), (→ p. 21 – 3.1.1 General site requirements) and (→ p. 30 – 4.2 Technical data).
2. Transport the instrument to the desired location.

Warning

Observe the following:

- The instrument must be transported in an upright position. It may be tilted slightly for unloading and reloading purposes only, e. g., when rolling the instrument off the transportation pallet.
- When transporting the instrument 2 people must counterbalance from the front side to prevent the instrument from falling down and causing severe injury, as well as possible severe damage to the instrument and the surrounding area!

3. When transporting the instrument on wheels (→ "Fig. 3-3"), grip the cabinet only at the marked locations (→ "Fig. 3-1").
4. To ensure a secure upright position at its intended location, the instrument must be adjusted.
5. To do so, unscrew both adjusting feets (→ "Fig. 3-2") using the provided fork wrench.
6. When subsequently transporting the instrument any further on wheels, screw them back in all the way.

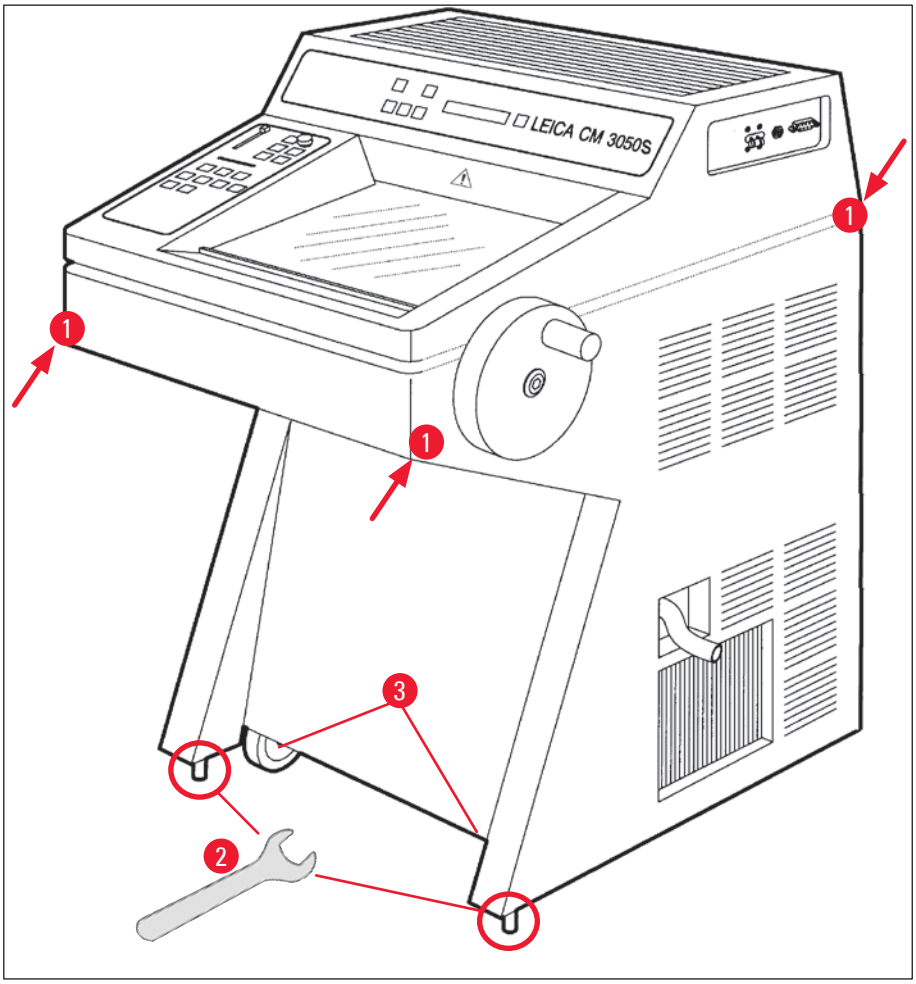

Fig. 3

3.2.1 Repacking

We recommend to keep the original shipping crate and the unpacking instructions for the Leica CM3050 S. For repacking, proceed as per unpacking instructions, in reverse order.

3.3 Available models

- Basic instrument: with sectioning motor/without specimen cooling
- Basic instrument: without sectioning motor/with specimen cooling
- Basic instrument: with sectioning motor/with specimen cooling

3.4 Standard delivery

			Order number
The standard equipment for the Leica CM3050 S includes the following parts:			
1	Basic instrument in the respective voltage variant (local power cord included)		
1	Handwheel with marking, antibacterial		14 0471 42558
1	Adapter cable EU-BR 16A		14 0411 47993
1	Heat extractor, stationary		14 0369 11197
1	Low-temperature stabilizer for heat extractor		14 0452 27919
1	Set of specimen discs:		14 0470 43550
	4	Specimen discs, 25 mm	14 0416 19275
	4	Specimen discs, 30 mm	14 0370 08587
1	Storage shelf, right		14 0443 25723
1	Storage shelf, left		14 0443 33549
1	Section waste tray		14 0400 26817
1	Foot switch with protective guard		14 0505 33888
1	Rubber mat		14 0443 25732
1	Freezing shelf cover		14 0443 30783
1	Brush shelf		14 0398 13088
1	Rubber plug		14 3000 00148
1	Tool set		14 0436 43463
	1	Brush, fine	14 0183 28642
	1	“Leica” brush w/magnet	14 0183 40426
	1	Allen key, size 1.5	14 0222 10050
	1	Allen key, size 2.5	14 0222 04137
	1	Allen key, size 3.0	14 0222 04138
	1	Allen key, size 4.0	14 0222 04139
	1	Allen key with spherical head, size 4.0	14 0222 32131
	1	Allen key, size 5.0	14 0222 04140
	1	Allen key with handle, size 5.0	14 0194 04760
	1	Allen key, size 6.0	14 0222 04141

		Order number
1	Single-head wrench, size 13	14 0330 33149
1	Single-head wrench, size 16	14 0330 18595
1	Bottle of tissue freezing medium, 125 ml	14 0201 08926
1	Bottle of cryostat oil, 50 ml	14 0336 06098
1	Pair of cut resistant gloves, size S	14 0340 40859
1	Instructions for Use, Leica CM3050 S, printed (English), with language CD 14 0443 80200	14 0443 80001
In addition to the above:		
• Instruments with specimen cooling:		
1	90 ° prism for direct specimen freezing on specimen head with clamping screw to facilitate specimen trimming	14 0443 25949
1	Specimen head fixture	14 0443 25895
• Configured instruments:		
1	Knife holder base	
1	Knife holder with accessories	
• Instruments with sectioning motor:		
1	Footswitch with protective guard	

If the supplied local power cord is defective or lost, please contact your local Leica representative.

Further accessories

Further accessories which you ordered will be included in the box containing the standard delivery items.

Note

- Knife holders are delivered with anti-roll guide, safety guard, and a separate instruction manual.
- In case of non-configured instruments, the knife holder is not a part of standard delivery but must be ordered separately.
- Check all delivered parts against the packing list and against your order to verify whether the delivery is complete. If there is any difference, contact your local Leica office immediately.

3.5 Installing/inserting accessories

3.5.1 Installing the handwheel

1. Insert pin (→ "Fig. 4-1") of the handwheel shaft into hole (→ "Fig. 4-2").
2. Place spring washer (→ "Fig. 4-3") onto screw (→ "Fig. 4-4") as shown.
3. Tighten screw (→ "Fig. 4-4") with an Allen key (→ "Fig. 4-5").
4. Remove protection (→ "Fig. 4-6") of self-adhesive disc (→ "Fig. 4-7").
5. Cover with self-adhesive disc (→ "Fig. 4-7").

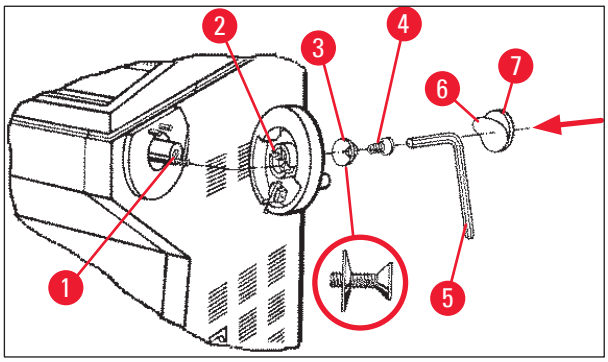

Fig. 4

Note

For purposes of transport (e.g. narrow doors), the handwheel can be removed.

» To remove the handwheel, proceed as described above but in reverse order.

3.5.2 Inserting the accessories

1. Place the rubber mat on top of the housing.
2. Insert the storage shelves into the cryochamber.
3. Install the stationary heat extractor into the quick-freeze shelf. See also drawing in (→ p. 54 – 5.5.1 Freezing specimens onto specimen discs with quick-freeze shelf and stationary heat extractor).
4. Insert the low temperature stabilizer into the quick freeze shelf (it must be located in the pivoting range of the heat extractor. See also drawing in (→ p. 54 – 5.5.1 Freezing specimens onto specimen discs with quick-freeze shelf and stationary heat extractor).
5. Insert section waste tray and brush shelf.
6. Install knife holder base onto microtome base plate and clamp.
7. Install knife holder and clamp (see knife holder instruction manual for details).
8. Place knife case with knife into chamber to precool.
9. Place all tools needed for section preparation into the chamber.
10. Close the sliding window.

Note

For a complete overview of all individual parts, see (→ p. 28 – 4.1 Overview).

3.5.3 The footswitch

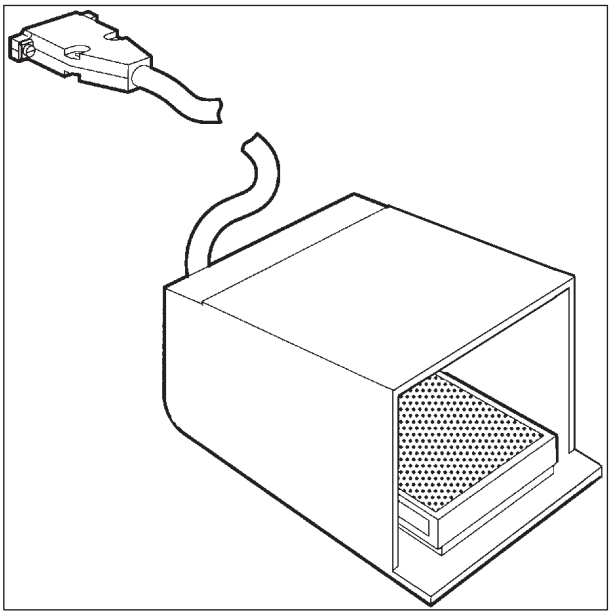

Fig. 5

Function

The footswitch (→ "Fig. 5") performs the same task as the RUN/STOP and RUN/ENABLE keys (activating/deactivating motorized sectioning/trimming). In addition, the footswitch can be used to activate the emergency stop function.

Models with footswitch:

All instruments with sectioning motor.

Note

Important note: In all instrument models that are delivered with footswitch, the footswitch must be installed! - Otherwise the instruments are not functional.

Connecting the footswitch

» Insert footswitch into port (→ "Fig. 6-1") and secure.

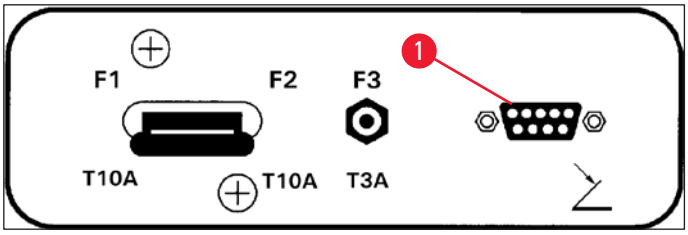

Fig. 6

3.6 Prior to switching on the instrument

Warning

- After transport, observe a waiting period of at least 4 hours before turning the instrument on. See also safety instructions (→ p. 15 – 2.3.1 Transport and installation).
- Observe all safety instructions in chapters (→ p. 16 – 2.3.2 Site requirements) and (→ p. 16 – 2.3.3 Electrical connections).

1. Insert mains plug into wall outlet.
2. Continue with (→ p. 34 – 5.1 Operating the instrument for the first time).

4. Instrument properties

4.1 Overview

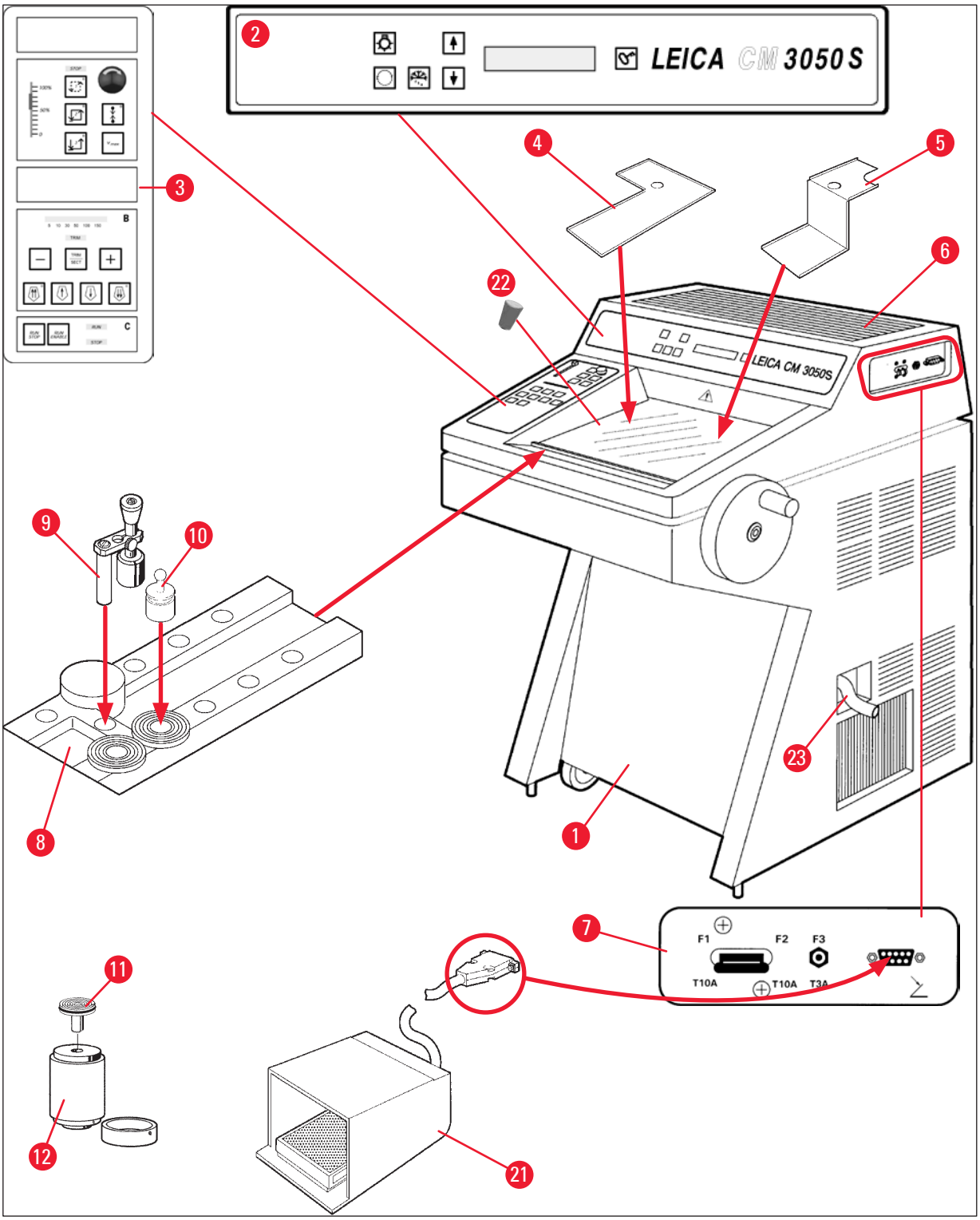

Fig. 7

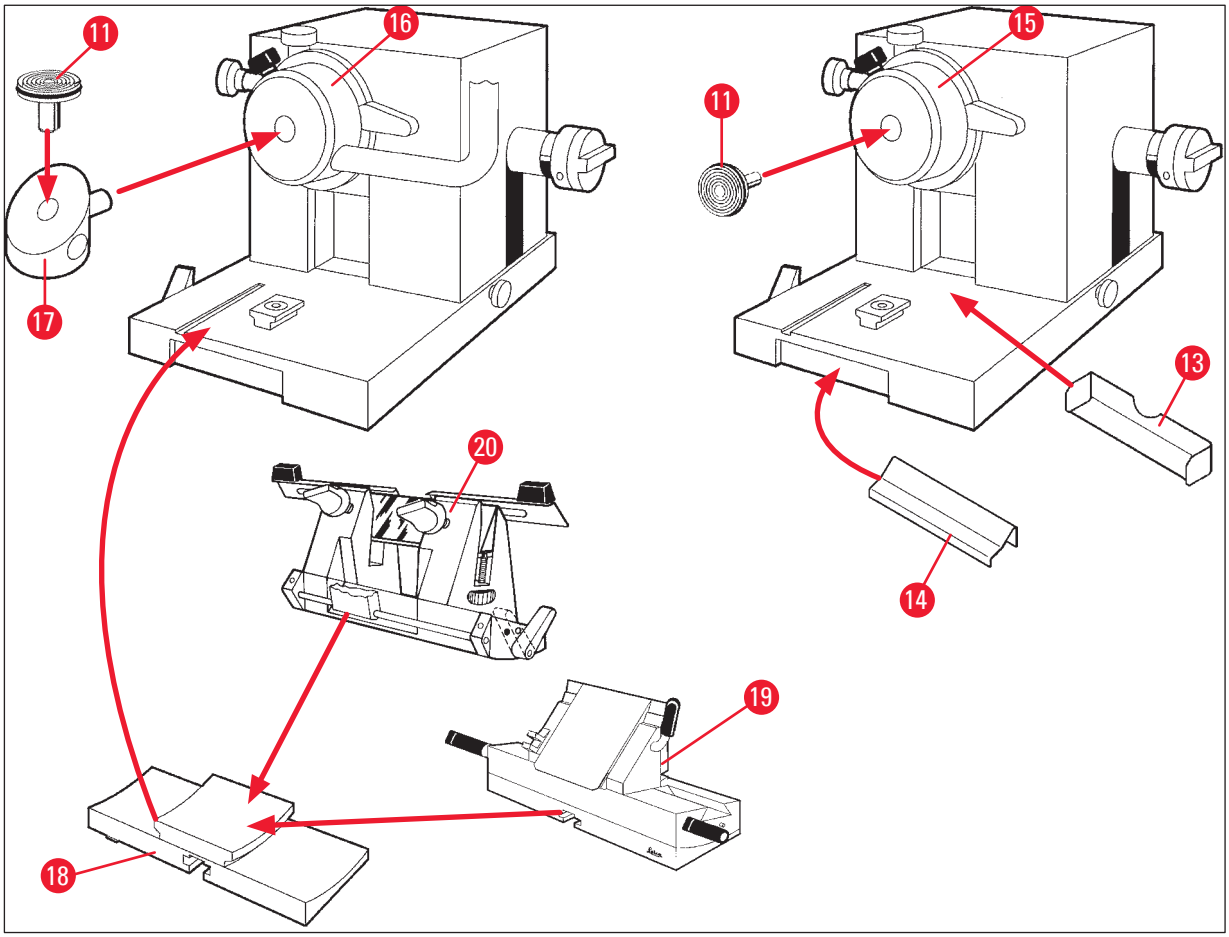

Fig. 8

1	Cryostat Leica CM3050 S	**13**	Section waste tray
2	Control panel 1	**14**	Brush shelf
3	Control panel 2	**15**	Specimen head w/o specimen cooling
4	Storage shelf, left	**16**	Specimen head with specimen cooling (Option)
5	Storage shelf, right	**17**	90 ° Prism (instruments with specimen cooling only)
6	Rubber mat	**18**	Knife holder base
7	Mains switch/Automatic cutout for sectioning motor, Footswitch port	**19**	Knife holder CE
8	Quick-freeze shelf	**20**	Knife holder CN
9	Stationary heat extractor	**21**	Footswitch with protective guard
10	Mobile heat extractor	**22**	Rubber plug
11	Specimen disc	**23**	Drain tube
12	Thermoblock (optional)		

4.2 Technical data

Note

Operating temperature range (ambient temperature): + 18 °C to + 35 °C. All specifications related to temperature are valid only up to an ambient temperature of + 20 °C and relative air humidity of less than 60 %.

Equipment identification

Instrument type	Model numbers					
CM3050S	14047033510 (motorized sectioning and object cooling)	14047033514 (motorized sectioning and object cooling)	14047033518 (motorized sectioning and object cooling)	14047033534 (motorized sectioning and object cooling)	14047033538 (motorized sectioning and object cooling)	14047033542 (motorized sectioning and object cooling)
	14047033511 (object cooling)	14047033515 (object cooling)	14047033520 (motorized sectioning)	14047033536 (motorized sectioning)	14047033540 (motorized sectioning)	14047033544 (motorized sectioning)
	14047033512 (motorized sectioning)	14047033516 (motorized sectioning)		14047056135 (China Version with Chinese power cord, motorized sectioning and object cooling)		

Electrical specifiations

Max. nominal voltage fluctuations (±10 %)	100 VAC	100 VAC	120 VAC	230 VAC	230 VAC	240 VAC
Nominal frequency	50 Hz	60 Hz	60 Hz	50 Hz	60 Hz	50 Hz
Power consumption	max. 1800 VA	max. 1800 VA	max. 1800 VA	max. 1800 VA	max. 1800 VA	max. 1800 VA
Power supply	IEC 60320-1 C-20					
Max. start-up current for 5 sec.	35 A eff.	30 A eff.	35 A eff.	25 A eff.	25 A eff.	25 A eff.
Mains input fuse (automatic circuit breaker)	T15A M3	T15A M3	T15A T1	T10A T1	T10A T1	T10A T1

Secondary fuses	T4A L250VAC (5x20 mm) T0.63A L250VAC (5x20 mm) T0.25A L250VAC (5x20 mm) T5A L250VAC (5x20 mm) T2A L250VAC (5x20 mm) T1A L250VAC (5x20 mm) T2.5A L250VAC (5x20 mm) T3.15A L250VAC (5x20 mm) T1.6A L250VAC (5x20 mm) T0.5A L250VAC (5x20 mm) T4A L250VAC (6.3x32 mm) T6.25A L250VAC (6.3x32 mm)

Dimensions and weight specification

Overall size of device, without handwheel (width x depth x height)	800 mm x 766 mm x 1040 mm
Overall size of device, with handwheel (width x depth x height)	882 mm x 766 mm x 1040 mm
Working height (armrest)	840 mm
Overall size of packaging (width x depth x height)	980 mm x 920 mm x 1330 mm
Empty weight (without accessories)	239 kg (with object cooling)

Environmental specification

Operating altitude	Max. 2000 m above sea level
Operating temperature	+18 °C to +35 °C
Relative humidity (operation)	20 % to 60 % RH non-condensing
Transport temperature	-29 °C to +50 °C
Storage temperature	+5 °C to +50 °C
Relative humidity (transport / storage)	10 % to 85 % RH non-condensing
Minimum distance to walls	Back: 150 mm (5.91 inches) Right: 300 mm (11.82 inches) Left: 150 mm (5.91 inches)

Emmisions and boundary conditions

Overvoltage category according to IEC 61010-1	II
Pollution degree according to IEC 61010-1	2
Means of protection according to IEC 61010-1	Class 1
Degree of protection according to IEC 60529	IP20

Heat emission	1800 J/s (6141 BTU/HR)
A-weighted noise level, measured at 1 m distance	< 70 dB (A)
EMC class	B (FCC Rules part 15) B (CISPR 11, IEC 61326, CAN ICES-3 (A)/NMB)

Warning

Observe (→ p. 16 – 2.3.2 Site requirements) and (→ p. 21 – 3.1.1 General site requirements)!

Chamber cooling

Temperature range	0 °C to -40 °C ±5 K, adjustable in 1 K increments, at ambient temperature of 20 °C
Cooling time to -25 °C	Max. 6 h, at starting point of 20 °C and at an ambient temperature of 20 °C and 60 % relative humitity
Cooling time to -35 °C	Approx. 8 h, at starting point of 20 °C and at an ambient temperature of 20 °C and 60 % relative humitity
Max. operating pressure	28 bar
Refrigerant*	300 g, refrigerant R452A*
Defrosting	Hot gas defrosting
Defrost duration	6 min to 12 min
Automatic turn-off	at chamber temperature > -5 °C at evaporator temperature > +38 °C
Manual defrosting	Yes
Automatic defrosting	Yes, time selectable, 1 defrost in 24 h
Programmable	Yes (hot gas defrost), selectable time
Defrosting intervals	1 defrost in 24 h or manual hot gas defrost
Defrost duration	12 minutes
Automatic turn-off defrost	At chamber temperature of more than -5 °C At evaporator temperature of more than +38 °C

Object head cooling

Optional feature included in model number:	see model numbers in (→ p. 30 – Equipment identification)
Temperature range	-10 °C to -50 °C ±3 K, at ambient temperature of 20 °C
Max. operating pressure	28 bar
Refrigerant*	205 g, refrigerant R452A*
Defrosting	Electronic heater
Defrost duration	10 min
Defrost temperature	+20 °C to +45 °C
Manual defrosting	Yes
Automatic defrosting	No

Quick-freeze shelf

Lowest temperature	-43 °C (+3/-5 K), at chamber temperature of -40 °C (+/-5 K) and at ambient temperature of 20 °C
Number of freezing stations	10
Defrosting	None

Warning

*) Refrigerant and compressor oil must be replaced by service personnel qualified and authorized through Leica only.

Microtome

Type	Rotary microtome
Section thickness range	0.5 µm to 300 µm
Horizontal specimen feed	25 mm +1 mm
Vertical specimen stroke	59 mm ±0.5 mm
Specimen retraction	50 µm ±20 µm (cannot be switched off)
Maximum specimen size	40 mm x 55 mm
Specimen orientation	±8 ° (x-, y-axis)
Sectioning speed Optional feature included in model number:	see model numbers in (→ p. 30 – Equipment identification)
	Slow: 0.1 mm to 100 mm/sec Fast: 0.1 mm to 170 mm/sec Vmax: 210 mm/sec
Coarse feed	Slow: max. 500 µm/sec Fast: min. 1000 µm/sec

Chamber lightning

Light source	LED

Other specifications

CE	Yes
CSA	Yes, for USA variant 120 VAC

5. Operation

5.1 Operating the instrument for the first time

Note

Prior to setting up the instrument, make sure to read the Instructions for Use carefully and in full.

When setting up the instrument, please follow the individual chapters in the following order:

1. First, study chapters (→ p. 7 – 1. Important information), (→ p. 12 – 2. Safety), and (→ p. 21 – 3. Installation) - install the instrument as described in (→ p. 21 – 3. Installation). The overview in (→ p. 28 – 4.1 Overview) is helpful during the unpacking and installation procedure in order to identify individual parts and place them in the correct location.
2. Go on to (→ p. 34 – 5. Operation). Read (→ p. 34 – 5.1 Operating the instrument for the first time), (→ p. 34 – 5.2 Switching on/fuses), (→ p. 35 – 5.3 Control panel 1) and (→ p. 47 – 5.4 Control panel 2) to learn all about the controls.
3. Select one of the available display languages (English, German, French, Spanish or Italian) (→ p. 37 – 5.3.3 Display indications when switching on).
4. Next, start to work with the instrument. Follow the instructions in (→ p. 54 – 5.5 Daily operation of the instrument).
   (→ p. 55 – 5.5.2 Freezing specimens onto specimen discs with 90 ° prism (Instruments w/ specimen cooling)) applies to instruments with specimen cooling only. The temperature chart in (→ p. 69 – 6.3 Reference chart for temperature settings (in minus °C)) is useful when it comes to selecting appropriate sectioning temperatures for different types of specimens.
5. When disinfecting / cleaning the instrument and/or removing / reinstalling the microtome, please follow the instructions in (→ p. 70 – 7. Disinfection, cleaning and maintenance).
6. In case of problems and malfunctions, please refer to (→ p. 64 – 6.1 Displayed error messages) and (→ p. 65 – 6.2 Potential problems - causes and remedies). These chapters list the most common types of problems which many times have simple causes that can be eliminated by the actual user.

Warning

If you find 'Call Technical Service' in the 'Remedy' column, please do so. Never try to solve these problems yourself.

5.2 Switching on/fuses

Switching on

» To switch on the instrument, place switch (→ "Fig. 9-1") in upper lock-in position.

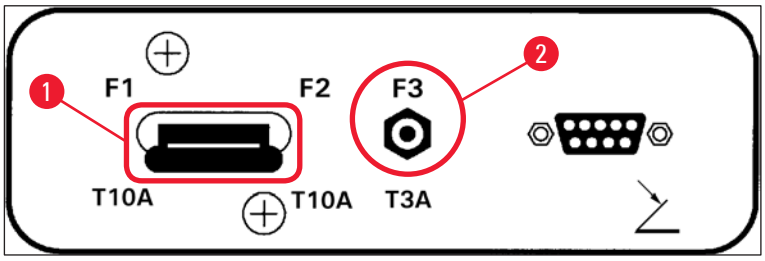

Fig. 9

Mains switch/automatic cutout (→ "Fig. 9-1") **for the instrument:**

In addition to its function as ON/OFF switch, switch (→ "Fig. 9-1") is also the automatic cutout for the instrument.

If the automatic cutout has been triggered (e.g. caused by overcurrent):

» Put switch (→ "Fig. 9-1") back in upper lock-in position.

Automatic cutout (→ "Fig. 9-2") **for sectioning motor:**

The instrument is equipped with an automatic cutout (→ "Fig. 9-2") for the sectioning motor.

If the sectioning motor is overloaded (e.g. when sectioning very hard specimens etc.) the automatic cutout (→ "Fig. 9-2") will be triggered.

To make the instrument functional again after the automatic cutout has been triggered:

» Push automatic cutout (→ "Fig. 9-2") inwards until it locks into position.

5.3 Control panel 1

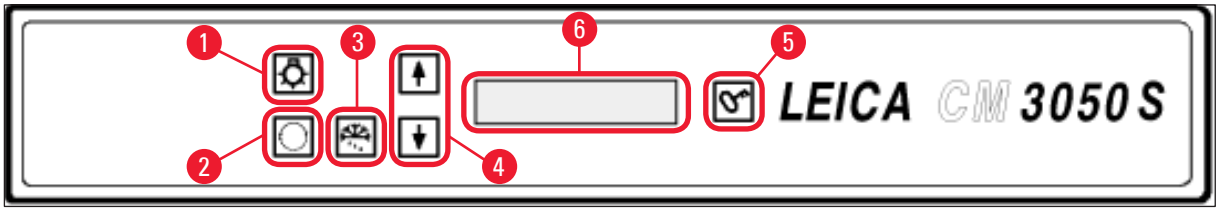

Fig. 10

1	Chamber illumination ON/OFF	4	Arrow keys
2	Select menu	5	LOCK/UNLOCK
3	Manual defrost	6	Display

5.3.1 Key functions in control panel 1

Key	Function
	ON/OFF key (→ "Fig. 10-1") for cryochamber illumination.
	(→ "Fig. 10-2") To select the menu items for setting/changing instrument parameters.
	In the status indication, pressing the arrow keys (→ "Fig. 10-4") displays the individual current parameters. • In the menu, pressing the arrow keys changes set values. • As soon as a value is displayed, it is automatically stored.
	Activates the manual defrost cycle (cryochamber). This key (→ "Fig. 10-3") is functional only when one of the menu items **SET TEMP CT ... ° C** or **SET TEMP OT ... ° C** (last one only applies to instruments with specimen cooling) has been selected first.
	Lock/unlock key (→ "Fig. 10-5"): • Locks the display to protect against accidental changes of set parameters. • Activates/deactivates a number of functions.

5.3.2 Display functions in control panel 1

The display (→ "Fig. 10-6") in control panel 1 combines several different functions:

1. When switching the instrument on:

A series of standard indications is displayed, during which two basic parameters can be selected (with the arrow keys (→ "Fig. 10-4")):

- Language (of display indications) and speed level of sectioning motor, see (→ p. 37 – 5.3.3 Display indications when switching on).

2. Menu function (activated via menu key (→ "Fig. 10-2")):

- Via the **menu** key a number of parameters can be selected, then be activated/deactivated via the **lock/unlock** key (→ "Fig. 10-5") and/or changed via the **arrow** keys (→ "Fig. 10-4"). See (→ p. 39 – 5.3.4 Menu functions: setting parameters of refrigeration, time and preset counter).

3. Status indication function:

The actual status of selected parameters is indicated in the display screen (→ "Fig. 10-6").

Some of those parameters are displayed automatically (e.g. **sectioning stroke phase**, **coarse feed position**, **handwheel locked**).

Others can be displayed by pressing the **arrow** keys; e.g. selected section thickness, preset counter status etc. See (→ p. 43 – 5.3.5 Status display) and (→ p. 45 – 5.3.6 Indication of refrigeration state, section thickness setting and counters).

5.3.3 Display indications when switching on

Meaning of indication	Operator activity
Initialization phase 1	none
8 8 8 8 8 8 8 8 8 8 8 8 8 8 8 8 8 8 8 8 8 8 8 8 8 8 8 8 8 8 8 8	
↓	
Initialization phase 2	none
■ ■	
↓	
Software version	none
C M 3 0 5 0 S V s . X X . X X	
↓	
Select display language	Select language via **arrow** keys
E N G L I S H	
↓	

Meaning of indication

Sectioning motor speed level **slow**/(**fast**)

		C	U	T	T	I	N	G		M	O	T	O	R	
						S	L	O	W						

Operator activity

Select speed level via arrow keys

Temperature prior to switching off < 0 °C

yes

Temperature upon switching on ≥ 0 °C

no →

C	T	.	.	.	°	C		O	T	.	.	.	.	°	C
		P	O	W	E	R		F	A	I	L	U	R	E	

yes *)

C	T	.	.	.	°	C		O	T	.	.	.	.	°	C
		D	R	Y		M	I	C	R	O	T	O	M	E	

no

Acknowledge indication by pressing once briefly.

C	T	.	.	.	°	C		O	T	.	.	.	.	°	C
						1	2	:	0	0					

Standard indication locked is displayed (display backround dark). To unlock: press until the display backround lights up.

C	T	.	.	.	°	C		O	T	.	.	.	.	°	C
■	■		H	O	M	E								❄	❄

Warning

If **DRY MICROTOME** is displayed: Do not switch on the instrument. Prior to switching on, both microtome and accessories must be completely dry. Remove microtome/accessories, disinfect if applicable, then dry thoroughly and reinstall ((→ p. 70 – 7.1 Safety instructions on disinfection and cleaning) to (→ p. 71 – 7.4 Removing/reinstalling the microtome)).

*) Indication in instruments with specimen cooling. Instruments without specimen cooling: only **CT** (centered) is displayed.

5.3.4 Menu functions: setting parameters of refrigeration, time and preset counter

ⓘ Once the instrument has gone through the initial sequence of indications, you can go on to the menu functions to select and/or change instrument parameters.

If display is locked: Press key until display background lights up.

» Next, press the **Menu** key (→ "Fig. 10-2"). With each key stroke the following parameters will be displayed (display sequence as listed):

1. Specimen temperature (in instrument with specimen cooling only) (-10 - -50 °C)
2. Cryochamber temperature (0 - -40 °C)
3. Selected number of sections - preset counter (**ON/OFF** and setting selection from 1 to 999)
4. Maximum specimen temperature (**ON/OFF**)
5. Real time (in 1-minute steps)
6. Defrost time (starting time of automatic cryochamber defrosting) (in 15-minute steps)
7. Duration of defrost cycle (cryochamber defrosting) (6 to 12 minutes duration)

Note

Menu items 5 and 6 displayed on 24 hour clock.

1. Specimen temperature: (instruments with specimen cooling only):

Press key until menu item **Set specimen temperature** is displayed:

S	E	T		T	E	M	P		O	T	-	-	-	°	C
														-	-

Press key briefly.

The line in the specimen temperature field is replaced by an asterisk.

S	E	T		T	E	M	P		O	T	-	-	-	°	C
														-	❄

From this point on the refrigeration system is activated and the desired set temperature can be selected with one of the **arrow** keys.

Press **arrow** key and release upon reaching the desired value.

C	T	.	.	.	°	C			O	T	-	3	5	°	C
■	■		H	O	M	E								-	❄

Note

Each time one of the arrow keys is pressed briefly, the value displayed in the menu will be changed one step up or down.

If an arrow key is pressed and held, the value will change continually (auto-repeat function).

When holding the key, scrolling speed will increase after a while.

As soon as a value is displayed, it is at the same time automatically stored.

2. Cryochamber temperature:

Press key until menu item **Set chamber temperature** is displayed:

Continue as described for specimen temperature.

3. Preset counter (instruments with sectioning motor only):

Press key until menu item **Preset counter** is displayed:

	P	R	E	S	E	T		C	O	U	N	T	E	R	
											d	n	-	-	-

= Preset counter deactivated

	P	R	E	S	E	T		C	O	U	N	T	E	R	
											d	n	0	5	6

= Preset counter activated

Preset counter function:

- The preset counter allows the user to carry out a predefined number of sections in the **Continuous stroke** sectioning mode.
- Once the preselected number of sections has been carried out (= section counter reading **0**), the specimen head will stop automatically in the lower limit position.
- The reference value (i.e. the value from which the preset counter counts downward) can be selected in the corresponding menu item.
- In order to be able to set a reference value, the preset counter function must be active.

- If the preset counter is deactivated (see diagrams above), press to activate.

Now there are two options:

1. Increase or decrease the actual reference value by pressing or .

2. Press ↑ and ↓ simultaneously in order to reload the former reference value (0 when setting up the instrument) and then press either ↑ or ↓ individually in order to select the desired reference value. Depending on where you start from and where you want to go, method 1 or method 2 is quicker (see examples).

Example 1:

- Actual preset counter reading = 50
- Former reference value = 300
- New reference value of 65 to be selected.

Method 1 is most convenient:

» Increase from 50 to 65 by pressing ↑.

Example 2:

- Actual preset counter reading = 50
- Former reference value = 300
- New reference value of 320 to be selected.

Method 2 is most convenient:

1. Press ↑ and ↓ simultaneously to reload old reference value (300).
2. Increase from 300 to 320 by pressing ↑.

Note

For further information on the preset counter, please refer to (→ p. 45 – 5.3.6 Indication of refrigeration state, section thickness setting and counters), (→ p. 45 – 4. Total section thickness counter).

4. Quick-freezing at maximum specimen temperature* (instruments with specimen cooling only):

Press key until menu item **Fast object freezing** is displayed:

F	A	S	T		O	B	J		F	R	E	E	Z	I	N
						O	F	F							

or

F	A	S	T		O	B	J		F	R	E	E	Z	I	N
							O	N							

Press lock/unlock key to activate or deactivate (ON/OFF).

*) with 90° prism - see also (→ p. 55 – 5.5.2 Freezing specimens onto specimen discs with 90 ° prism (Instruments w/specimen cooling)).

5. Real time:

Press key until menu item **Time** is displayed:

T	I	M	E								1	0	:	2	3

» Use arrow key (↑ or ↓) to set real time. Setting minutes as well as hours in 1-minute steps. Holding arrow button increases scrolling speed!

6. Starting time of automatic defrost cycle:

Press key until menu item **Defrost period** is displayed:

D	E	F	R		T	I	M	E				4	:	3	0

(Time on display = start time of defrost cycle)

» Use arrow keys (↑ or ↓) to select the desired defrost start time.

Note

The automatic defrost cycle takes place once every 24 hours at the selected defrost time.

7. Duration of defrost cycle:

Press key until menu item **Defrost period** is displayed:

D	E	F	R	O	S	T		P	E	R	I	O	D		
C	H	A	M	B	E	R	:			0	8		M	I	N

» Use arrow keys (↑ or ↓) to adjust defrost time (Only if necessary - see below).

Note

Important information for setting the defrost parameters.

- Starting time of defrost cycle:
  We recommend to program the automatic defrost cycle for a time outside regular working hours as a period of 4 hours should pass after the defrost cycle before work with the instrument is resumed (→ p. 61 – 5.7.1 Automatic chamber defrost cycle).
- Defrost cycle duration:
  The duration of the chamber defrost cycle is set to 8 minutes in factory. This setting should only be changed, if the evaporator is not completely de-iced during the 8-minute cycle. In such cases, increase the defrost cycle duration gradually until the the evaporator is ice-free after defrosting. The selected defrost cycle duration is valid for both automatic and manual chamber defrost cycle.

5.3.5 Status display

Each individual parameter is displayed in a certain area of the display screen.

Upper line (→ "Fig. 11-1"):

In the menu (→ p. 39 – 5.3.4 Menu functions: setting parameters of refrigeration, time and preset counter): indication of selected menu item.

Standard indication: Chamber temperature (instruments with specimen cooling: chamber and specimen temperature).

Standard indication upper line:

Instruments with chamber and specimen cooling:

C	T	-	3	0	°	C			O	T	-	3	5	°	C
■	■	H	O	M	E									❄	❄

Instruments with chamber cooling only

				C	T	-	3	0	°	C					
■	■	H	O	M	E									❄	-

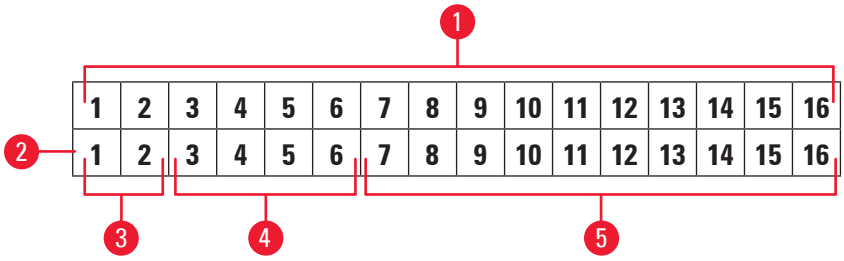

Fig. 11

Lower line (→ "Fig. 11-2"):

Digits 1 and 2 (→ "Fig. 11-3") indicate sectioning stroke position:

□□ • Sectioning stroke (→ "Fig. 12-1") (outside sectioning window)

■ • Retraction stroke (→ "Fig. 12-2")

[ ] • Sectioning stroke (→ "Fig. 12-3") (inside sectioning window)

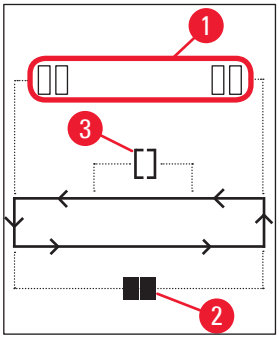

Fig. 12

Digits 3 to 6 (→ "Fig. 11-4") indicate coarse feed position:

HOME	• Rear limit position
STOP	• Front limit position

Indication of Malfunction or Handwheel locked:

???	• Microtome plug loose, implausible values etc.
LOCKED	• Handwheel is locked

Indication **LOCKED** completely overlays digits **3** through **16**, i.e. while **LOCKED** is displayed, no other parameters will be displayed in digits **3** - **16** of the lower line.

Note

Further indications: (→ p. 64 – 6.1 Displayed error messages).

Digits 7 to 16 (→ "Fig. 11-5") indicate the following parameters:

Refrigeration status:

- Digit 15 = cryochamber
- Digit 16 = specimen

Meaning of refrigeration symbols:

-	• Refrigeration OFF
❄	• Refrigeration ON
❄	• Defrosting active

- Section thickness (set value)
- Section counter (actual value)
- Indication of total section thickness (actual value)
- Preset counter

Scroll via arrow keys to display individual parameters

5.3.6 Indication of refrigeration state, section thickness setting and counters

These parameters can be displayed via the arrow keys.

When pressing ↑, the parameters are displayed in the sequence listed on this page; when pressing ↓, they are displayed in reverse order. The display can be scrolled continuously, i.e. after the last parameter the display will automatically start again with the first.

1. Refrigeration state

C	T	-	3	0	°	C			O	T	-	3	5	°	C
■	■	H	O	M	E									❄	❄

Meaning of the refrigeration symbols (asterisks) see (→ p. 43 – 5.3.5 Status display).

2. Section thickness

C	T	-	3	0	°	C			O	T	-	3	5	°	C
										µ	0	1	0	.	0

The sectioning thickness is set with the plus and minus key ⊞ ⊟ (→ p. 53 – 5.4.7 Setting the section thickness).

3. Section counter

C	T	-	3	0	°	C			O	T	-	3	5	°	C
											∑	n	0	0	0

Once displayed (via arrow keys), the section counter can be set to 0 at any time.

- To set to 0 press ↺.

If the section counter is not set to 0 by the user at some point, sections are counted up to 999 at which point the counter automatically switches back to 0.

4. Total section thickness counter

C	T	-	3	0	°	C			O	T	-	3	5	°	C
								∑	µ	0	0	0	0	.	0

Can also be set to 0 at any time (via ↺ key).

If the total section thickness indication is not set to 0 manually, the instrument counts up to maximum 9999.5 µm at which point the counter will automatically switch back to 0.

This indication shows the total thickness of all sections carried out since the counter was last set to 0. All sections, in sectioning and trimming mode, are counted.

5. Preset counter

C	T	-	3	0	°	C			O	T	-	3	5	°	C
											d	n	0	5	6

Setting preset counter to **0**:

» Press key.

ⓘ can also be pressed while the continuous sectioning mode is in motion; in this case the preset counter is set to **0** and sectioning stops upon reaching the lower limit position.
After it has been set to **0**, the preset counter is inactive.

Reloading the former reference value:

» Press and simultaneously.

ⓘ Reloading the former reference value is possible also while the continuous sectioning mode is in motion:

✓ Upon pressing both **arrow** keys, the instrument continues sectioning without interruption, starting to count down from the old reference value.

5.4 Control panel 2

Note

The layout of the control panel 2 is different between the instruments with sectioning motor (→ "Fig. 13-1") and those without sectioning motor (→ "Fig. 13-2").

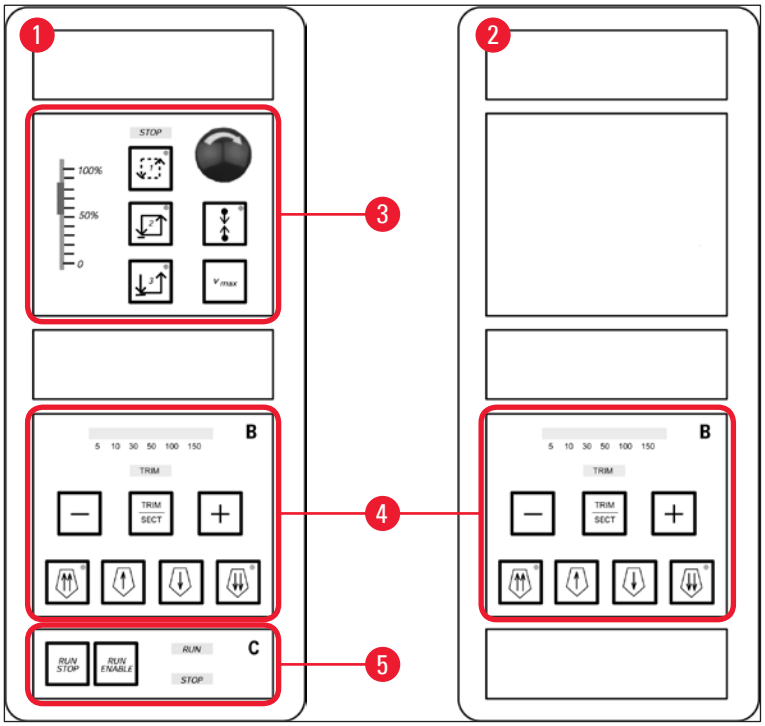

Fig. 13

Instruments with sectioning motor

In instruments with sectioning motor, the control panel is equipped with three functional areas: (→ "Fig. 13-3"), (→ "Fig. 13-4") and (→ "Fig. 13-5").

Functional area (→ "Fig. 13-3"):

- Sectioning modes
- Sectioning window
- Sectioning speed
- Emergency stop function

Functional area (→ "Fig. 13-4"):

- Coarse feed
- Trimming
- Section thickness selection

Functional area (→ "Fig. 13-5"):

- Start/Stop sectioning

Instruments without sectioning motor

In instruments without sectioning motor, control panel 2 only consists of functional area (→ "Fig. 13-4").

Functional area (→ "Fig. 13-4"):

- Coarse feed
- Trimming
- Section thickness selection

5.4.1 Selecting a sectioning mode/start and stop sectioning

Note

The following desriptions are only valid for the Functional areas (→ "Fig. 13-3") and (→ "Fig. 13-5") - Instruments with sectioning motor only.

Three different sectioning modes can be selected for motorized sectioning:

Sectioning mode 1 - Intermittent stroke:

The specimen head travels up and down as long as the RUN/STOP and RUN/ENABLE keys are pressed simultaneously or as long as the footswitch is depressed.

Sectioning mode 2 - Continuous stroke:

The specimen head travels up and down until it is stopped by pressing RUN/STOP or RUN/ENABLE or by depressing the footswitch.

Sectioning mode 3 - Single stroke:

The specimen head carries out one sectioning stroke and then stops in the lower limit position.

Activating a sectioning mode

» Press one of the three sectioning mode keys described above. While a sectioning mode is active, the LED in the corresponding key will be illuminated.

Start/stop motorized sectioning

Sectioning mode 1 - Intermittent stroke:

1. Simultaneously press and hold RUN/STOP and RUN/ENABLE or depress and hold footswitch.
2. To stop the sectioning stroke, release the keys or the footswitch: The specimen head stops immediately.

Sectioning mode 2 - Continuous stroke:

1. Simultaneously press and release RUN/STOP and RUN/ENABLE or depress and release footswitch.
2. To stop sectioning: Press and release RUN/STOP or RUN/ENABLE or depress and release the footswitch: The specimen head stops upon reaching the lower limit position.

Sectioning mode 3 - Single stroke:

1. Simultaneously press and release RUN/STOP and RUN/ENABLE or depress and release footswitch.
2. The instrument carries out one complete section/retraction stroke and the specimen head stops upon reaching the lower limit position.

Note

While sectioning is in motion, LED RUN is illuminated.

While the sectioning motor is deactivated, LED STOP is illuminated. Both LEDs are located in functional area (→ "Fig. 13-5").

5.4.2 Setting the sectioning window

Note

The following desriptions are only valid for the Functional areas (→ "Fig. 13-3") and (→ "Fig. 13-5") - Instruments with sectioning motor only.

The term **SECTIONING WINDOW** stands for a different (slower) speed setting in that part of the sectioning stroke where the specimen is actually cut, while the remaining sectioning stroke (above and below the specimen) as well as the retraction (return) stroke are carried out at a higher speed level (time-saving feature).

If a sectioning window is set, speed inside the window is as set on the control panel. Outside the sectioning window the specimen head travels at a proportionately higher speed.

Note

Always set the sectioning window while in the sectioning stroke (specimen moves downward). Setting the window in retraction stroke (specimen travels upward) is not possible.

How to set the sectioning window:

1. Position lower edge of specimen approx. 3 mm above the knife edge (rotate handwheel clockwise).
2. Press sectioning window key .
3. Position upper edge of specimen just below the knife edge (continue to rotate the handwheel clockwise).
4. Press sectioning window key once more .

✓ The value has been stored when the LED in the sectioning window key lights up briefly.

ⓘ If the LED flashes, the value has not yet been stored, because the user has tried to set a window margin outside the possible window range (the area in which the sectioning window can be set is slightly smaller than the total section stroke).

5. In that case, repeat the step in question.

Note

The sectioning window cannot be deleted. If need be, it can be set to maximum size (i.e. almost the entire sectioning stroke will be carried out at one and the same speed).

Every time after the instrument is disconnected from mains, the sectioning window is set to maximum size upon switching back on. This also applies when the instrument is switched on for the first time.

5.4.3 Selecting sectioning speed

Note

- The following desriptions are only valid for the functional areas (→ "Fig. 13-3") and (→ "Fig. 13-5") - Instruments with sectioning motor only.
- Sectioning speed is selected via the sliding potentiometer. Speed can be changed while sectioning is in motion.

Warning

Caution when working in continuous mode:

- If the slider is set to 0, the sectioning motion stops, however, the actual sectioning mode is still active - just operating at 0 speed.
- If the slider is accidentally moved, sectioning will be resumed - Risk of injury!

Therefore:

- Do not interrupt sectioning/trimming by setting the sliding potentiometer to zero speed!
- See also safety instruction in (→ p. 18 – 2.3.6 Motorized sectioning).

Vmax key

As long as the key is pressed, the sectioning motion is carried out at maximum speed (210 mm/s).

Note

While Vmax is active, the sectioning window is inactive.
When the Vmax key is released, the sectioning window becomes active again.

5.4.4 Emergency stop

Note

The following desriptions are only valid for the functional areas (→ "Fig. 13-3") and (→ "Fig. 13-5") - Instruments with sectioning motor only.

Activate by:

» either pressing the emergency stop button forcefully (must lock in position),

» or depressing the footswitch forcefully.

✓ Either way, sectioning is interrupted at once.

In both cases, the red STOP LED in functional area (→ "Fig. 13-3") lights up, indicating that the emergency stop function has been activated. Simultaneously all 3 sectioning modes are deactivated (= all 3 LEDs off).

Deactivate the emergency stop function:

» Rotate the button in the direction of the arrow until it unlocks and slips upward into its original position.

✓ As soon as the emergency stop button has been unlocked, the red STOP LED is extinguished.

» If the emergency stop function has been activated with the footswitch, unlocking is not necessary.

✓ As soon as the footswitch is released, the red STOP LED is extinguished.

Note

To continue work, select one of sectioning modes 1 - 3 and restart the sectioning motion.
See (→ p. 14 – 2.2.3 Emergency stop function (instruments with sectioning motor only)) for further information on the emergency stop.

5.4.5 Coarse feed keys

Note

The following descriptions are valid for all models. See functional area (→ "Fig. 13-4").

The four coarse feed keys in functional area (→ "Fig. 13-4") function as follows:

Coarse feed fast backward (Travelling speed 1,000 µm/s)

- Press key to activate.
Specimen head travels backward (= away from knife):

a. until it reaches the rear limit position,

b. until it is stopped by pressing one of the coarse feed keys (to stop the function, any of the four coarse feed keys can be pressed).

Coarse feed slow backward (Travelling speed 500 µm/s)

- To start, press key and hold.
Specimen head travels backward (= away from knife) as long as the key is held.

As long as the backward coarse feed (both fast and slow) is in motion, the HOME LED is illuminated.

Upon reaching the rear limit position, the HOME LED starts flashing and the display in control panel 1 reads HOME.

Coarse feed Fast forward (Travelling speed 1,000 µm/s)

- To activate the function, press key and hold.
The specimen head travels forward (= towards the knife) as long as the key is held.

Coarse feed slow forward (Travelling speed 500 µm/s)

As long as the forward coarse feed (both fast and slow) is in motion, the stop LED is illuminated.

Upon reaching the front limit position, the stop LED starts flashing and the display in control panel 1 reads STOP.

5.4.6 Trimming and sectioning functions - switching between trimming and sectioning

Note

The following descriptions are valid for all models. See functional area (→ "Fig. 13-4").

TRIM / SECT	Press this key to alternate between the two functions.
TRIM	Illuminated: Trimming mode is active.
TRIM	Off: Sectioning mode is active.

Selecting trimming thickness

1. Activate trimming mode
2. Select trimming thickness (= sectioning thickness at which trimming is carried out) by pressing [+] or [−].

✓ The selected thickness is displayed in the corresponding LED: 5 10 30 50 100 150

Motorized trimming

1. Select Continuous stroke in functional area (→ "Fig. 13-3").
2. Activate trimming by pressing RUN/STOP and RUN/ENABLE (located in functional area (→ "Fig. 13-5") simultaneously or by depressing the footswitch.
3. To stop trimming press RUN/STOP or RUN/ENABLE or depress the footswitch again.

✓ Trimming thickness can be changed while trimming is in motion by pressing [+] or [−].

5.4.7 Setting the section thickness

Note

The following descriptions are valid for all models. See functional area (→ "Fig. 13-4").

1. Activate sectioning mode (TRIM off).

C	T	.	.	.	°	C		O	T	.	.	.	.	°	C
										µ	0	1	0	.	0

2. Press [+] or [−] to select section thickness.
3. Pressing one of these keys once makes the display in control panel 1 switch to section thickness indication (thickness value not yet being altered).
4. Pressing [+] or [−] further starts to change the actual section thickness setting.

Selectable section thickness settings:

0	-	2 µm	in	0.5 µm	steps
2	-	10 µm	in	1 µm	steps
10	-	20 µm	in	2 µm	steps
20	-	60 µm	in	5 µm	steps
60	-	100 µm	in	10 µm	steps
100	-	300 µm	in	50 µm	steps

5.5 Daily operation of the instrument

- Select chamber temperature and, in instruments with specimen cooling, specimen temperature according to the type of specimen to be sectioned, see also (→ p. 69 – 6.3 Reference chart for temperature settings (in minus °C)).
- **Do not continue with** (→ p. 54 – 5.5.1 Freezing specimens onto specimen discs with quick-freeze shelf and stationary heat extractor) **before the actual chamber/(specimen) temperature corresponds to the set value**. This may take several hours (e.g. when operating the instrument for the first time or when the instrument had been switched off).

Warning

Prior to operating the instrument, please read and observe the following safety instructions:

- (→ p. 13 – 2.2 Integrated safety devices)
- (→ p. 17 – 2.3.4 Handling microtome knives/blades)
- (→ p. 17 – 2.3.5 Safety guard/handwheel lock)
- (→ p. 18 – 2.3.6 Motorized sectioning)
- (→ p. 18 – 2.3.7 Defrosting/handling frozen tissue)
- (→ p. 18 – 2.3.8 Frozen parts of the instrument and frozen accessories)
- (→ p. 18 – 2.3.9 Infectious/radioactive material)

5.5.1 Freezing specimens onto specimen discs with quick-freeze shelf and stationary heat extractor

1. Size the specimen.
2. Apply sufficient amount of tissue freezing medium onto ambient temperature specimen disc.
3. Inside the cryochamber, place the specimen onto the disc and orient.
4. Place specimen disc with specimen into one of the 10 openings in the quick-freeze shelf (→ "Fig. 14") and freeze.

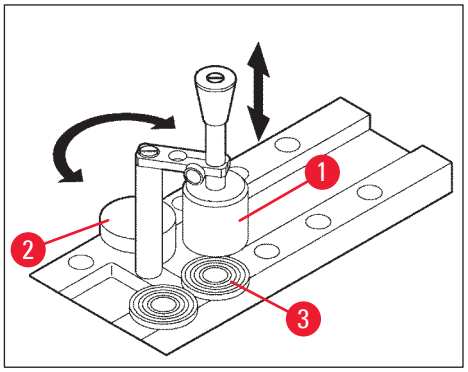

Fig. 14

ⓘ The freezing process can be sped up by using the stationary heat extractor (→ "Fig. 14-1"). Next to the low temperature stabilizer (→ "Fig. 14-2") (Parking station), 3 specimen discs (→ "Fig. 14-3") can be placed within its pivoting range.

» Place the heat extractor (→ "Fig. 14-1") directly onto the specimen surface until the specimen is completely frozen.

5.5.2 Freezing specimens onto specimen discs with 90 ° prism (Instruments w/specimen cooling)

In instruments with specimen cooling, the 90 ° prism, which is inserted into the specimen head, is an additional option to freeze specimens at maximum negative temperature.

Installing the 90 ° prism

1. Loosen screw (→ "Fig. 15-3") at specimen head.
2. Insert pin (→ "Fig. 15-1") of prism completely into receptacle (→ "Fig. 15-2") in the specimen head.

Warning

Important: the entire rear surface of the prism must fit tightly against the specimen head surface!

3. Retighten screw (→ "Fig. 15-3") at specimen head.

✓ The prism now forms a horizontal surface for quick specimen freezing.

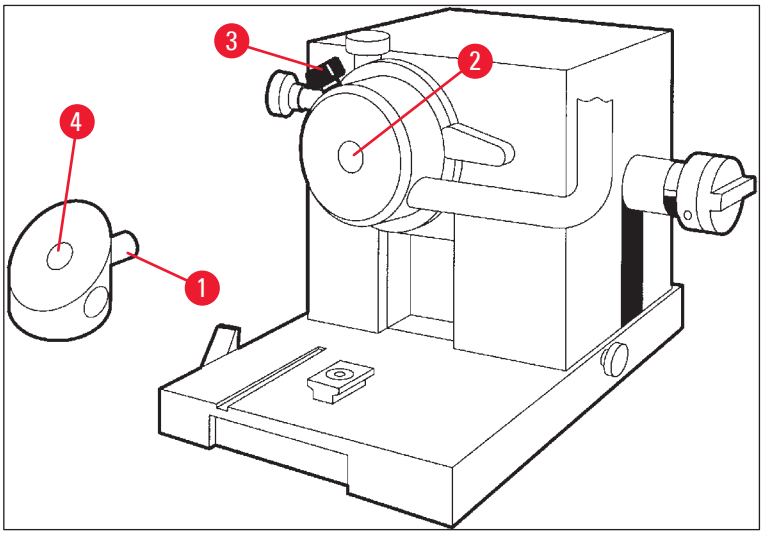

Fig. 15

Freezing specimens with the 90 ° prism

1. Apply sufficient amount of tissue freezing medium onto ambient temperature specimen disc, add specimen and orient.
2. Insert specimen disc with specimen into the receptacle (→ "Fig. 15-4") of the prism.
3. Press to activate menu item **Fast Object Freezing** and activate function by pressing (→ p. 39 – 5.3.4 Menu functions: setting parameters of refrigeration, time and preset counter).
4. The specimen head is now automatically cooled down to the lowest temperature (-50 °C).
5. Once the specimen is frozen, remove the disc from the prism and store it in the quick freeze shelf until inserting it into the specimen head.
6. Press again to activate menu item **Fast Object Freezing** and deactivate the function by pressing once again (→ p. 39 – 5.3.4 Menu functions: setting parameters of refrigeration, time and preset counter).
7. The specimen head temperature now automatically returns to the previously selected set value.
8. Loosen screw (→ "Fig. 15-3") at specimen head and remove prism (→ "Fig. 15-1").
9. Store prism inside the cryochamber.

5.5.3 Optional accessories for freezing and for removing of frozen specimens

Mobile heat extractor

In addition to the stationary heat extractor (→ p. 23 – 3.4 Standard delivery), a mobile heat extractor (→ "Fig. 16") is available as an optional accessory (→ p. 81 – 9.2 Ordering information - accessories):

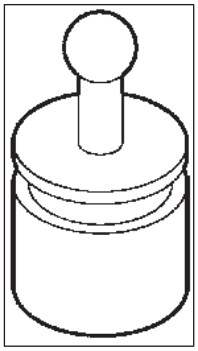

Fig. 16

1. Store heat extractor in chamber to precool.
2. Place onto specimen in quick-freeze shelf.
3. Remove as soon as specimen is frozen.

Thermoblock

The thermoblock makes it easy to remove frozen specimens from the specimen discs.

Note

Do not store the thermoblock inside the cryochamber - store at room temperature and only place into the chamber for removing specimens from discs.

1. Place cap (→ "Fig. 17-5") on one of the two ends of the thermoblock (→ "Fig. 17-4") so that the correct size opening (→ "Fig. 17-3") for the disc to be inserted is exposed.
2. Insert pin (→ "Fig. 17-2") of specimen disc (→ "Fig. 17-1") into the opening (→ "Fig. 17-3").
3. After about 20 seconds remove the frozen specimen from the specimen disc (use tweezers).
4. If cap (→ "Fig. 17-5") fits too loosely, readjust with screw (→ "Fig. 17-6"). Do not tighten screw too much!
5. Once the specimen has been detached from the disc, remove the thermoblock from the cryochamber.

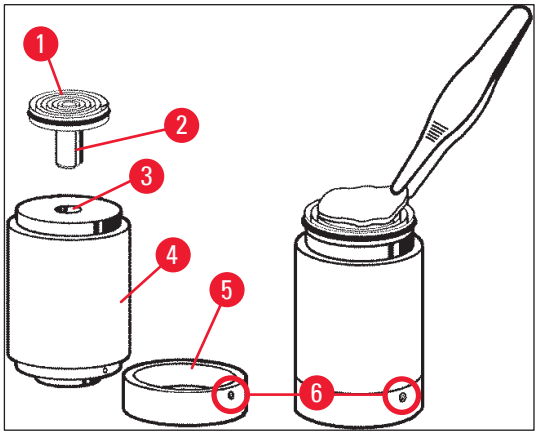

Fig. 17

5.5.4 Inserting specimen discs into the specimen head

1. Lock handwheel in upper position.

Warning

If a knife has already been inserted into the knife holder, cover knife edge with safety guard!

2. Loosen clamping screw (→ "Fig. 18-3").
3. Insert specimen disc in opening (→ "Fig. 18-2") (rear surface of specimen disc must fit tightly against surface of specimen head).
4. Tighten clamping screw (→ "Fig. 18-3").

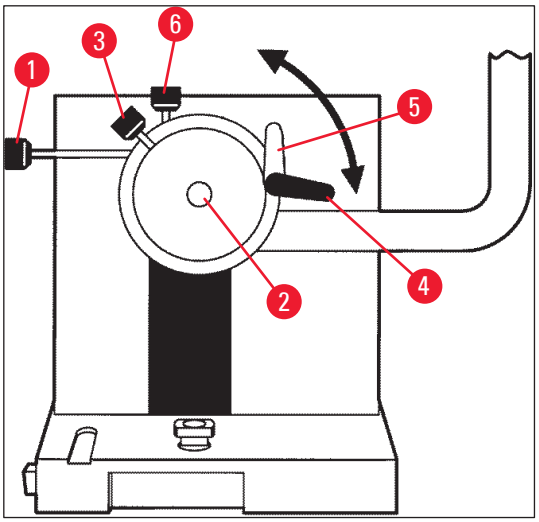

Fig. 18

5.5.5 Specimen orientation

1. Insure that handwheel is locked in upper position
2. Open clamping lever (→ "Fig. 18-4") --> (→ "Fig. 18-5").
3. Orient specimen via orienting screws (→ "Fig. 18-1") and (→ "Fig. 18-6").
4. Retighten clamping lever (→ "Fig. 18-4").

5.5.6 Trimming/sectioning

Inserting the knife

1. Insert the knife / disposable blade into the knife holder.
2. Select appropriate clearance angle at knife holder (settings between 4 ° and 6 ° are suitable for the majority of applications).

Note

For details on how to insert and adjust the knives, please refer to the separate instruction manual(s) for your knife holder(s). See also chapter (→ p. 13 – 2.2 Integrated safety devices) and (→ p. 15 – 2.2.4 Safety guard).

Manual trimming

1. Adjust knife/knife holder relative to specimen (see 'Knife holder' Instructions for Use).
2. Unlock handwheel.
3. Use motorized coarse feed to bring specimen close to knife (→ p. 52 – 5.4.5 Coarse feed keys).
4. Select desired section thickness (→ p. 53 – 5.4.7 Setting the section thickness).
5. Move anti-roll plate away from knife.
6. Rotate handwheel to trim specimen down to desired sectioning plane.

Motorized trimming

1. Adjust knife/knife holder relative to specimen (see 'Knife holder' Instructions for Use).
2. Unlock handwheel.
3. Center handwheel grip (→ p. 14 – 2.2.2 Centering the handwheel grip).
4. Use motorized coarse feed to bring specimen close to knife (→ p. 52 – 5.4.5 Coarse feed keys).
5. Move anti-roll plate away from knife.

ⓘ Next steps: (→ p. 53 – 5.4.6 Trimming and sectioning functions - switching between trimming and sectioning).

Sectioning

1. Adjust knife/knife holder relative to specimen (see 'Knife holder' Instructions for Use).
2. Place anti-roll guide onto knife.
3. Orient specimen, if necessary (→ p. 58 – 5.5.5 Specimen orientation).
4. Select desired section thickness (→ p. 53 – 5.4.7 Setting the section thickness).
5. Start sectioning at approx. 20 µm, reduce section thickness gradually until reaching the appropriate thickness for the type of specimen to be sectioned.
6. Discard the first 2 to 3 sections cut at the desired section thickness.

Note

When sectioning manually, rotate the handwheel evenly and at uniform speed.

For all details on motorized sectioning, please refer to chapters:

- (→ p. 48 – 5.4.1 Selecting a sectioning mode/start and stop sectioning)
- (→ p. 49 – 5.4.2 Setting the sectioning window)
- (→ p. 50 – 5.4.3 Selecting sectioning speed)
- (→ p. 51 – 5.4.4 Emergency stop)
- For advice on appropriate sectioning temperatures for different types of tissue, please refer to (→ p. 69 – 6.3 Reference chart for temperature settings (in minus °C)).

5.6 Finishing work

5.6.1 Daily routine steps

Warning

Remove all specimens from the cryochamber and store safely! See also corresponding safety instructions in (→ p. 18 – 2.3.7 Defrosting/handling frozen tissue)!

1. Lock handwheel.
2. Remove knife from knife holder, disinfect, dry (→ p. 70 – 7. Disinfection, cleaning and maintenance) and store in the knife case.
3. Use a cold brush to sweep frozen sectioning waste into the section waste tray.
4. Empty section waste tray (dispose of sectioning waste according to the applicable regulations on disposal of special category waste).
5. If necessary, carry out a complete disinfection procedure (→ p. 70 – 7. Disinfection, cleaning and maintenance).
6. Remove all specimens from the chamber and store safely.
7. Close sliding window.
8. Switch off cryochamber illumination.
9. Use **lock/unlock** key to lock display in control panel 1 (Display background dark = locked):

C	T	.	.	.	°	C		O	T	.	.	.	.	°	C
					1	2	:	0	0						

Warning

Do not switch off mains switch/automatic cutout (→ p. 34 – 5.2 Switching on/fuses)!

5.6.2 Switching off the instrument for a longer period of time

If you do not plan to use the instrument for an extended period of time, it can be switched off.

However, since this involves a lot of work (see below), it should be considered carefully whether switching off the instrument is really the better option.

Note

If the instrument is switched off, the microtome must be removed. Then the microtome, cryochamber and all accessories must be disinfected and dried.

- For that purpose, follow the instructions in (→ p. 70 – 7.1 Safety instructions on disinfection and cleaning) through (→ p. 74 – 7.4.3 Reinstalling the microtome).

5.7 Defrosting

The Leica CM3050 S has 3 (instruments without specimen cooling: 2) different defrosting options.

- Automatic chamber defrost cycle
- Manual chamber defrost cycle
- Specimen head defrosting (manual) - instruments with specimen cooling only.

Warning

Read the safety instructions (→ p. 18 – 2.3.7 Defrosting/handling frozen tissue). Make sure to remove sensitive specimens from the cryochamber before the defrost cycle starts.

5.7.1 Automatic chamber defrost cycle

The automatic defrost cycle is carried out once every 24 hours at the preselected time (→ p. 39 – 5.3.4 Menu functions: setting parameters of refrigeration, time and preset counter).

- During the defrost cycle, the corresponding asterisk is displayed inversely:

C	T	-	3	0	°	C			O	T	-	3	5	°	C
■	■	H	O	M	E									❄	❄

- Once the defrost cycle is finished, the instrument automatically switches back to refrigeration.

Instruments with specimen cooling:

When defrosting starts, to avoid icing the specimen head is automatically adjusted to a temperature between -10 °C and -5 °C, i.e. the set temperature value is deactivated temporarily.

The specimen head refrigeration is automatically switched back on when:

- at least 4 hours have passed since the defrost cycle was completed;
- and the actual chamber temperature deviates less than 5 K from set value.

✓ After the specimen head refrigeration has been switched back on, the specimen head temperature rises briefly to +10 °C and then decreases until it reaches the set value.

Switching specimen cooling back on immediately after defrosting:

As soon as the chamber defrost cycle is completed, specimen cooling can be switched back on immediately:

Press key until menu item **Set specimen temperature** is displayed:

S	E	T		T	E	M	P		O	T	-	3	5	°	C
														❄	-

Press key.

S	E	T		T	E	M	P		O	T	-	3	5	°	C
														❄	❄

Specimen cooling is switched back on.

Note

Despite the possibility of switching the specimen cooling system back on immediately after the automatic chamber defrost cycle, we recommend the automatic defrost cycle be set at a point in time when the entire procedure can be controlled automatically (→ p. 39 – 5.3.4 Menu functions: setting parameters of refrigeration, time and preset counter).

5.7.2 Manual chamber defrost cycle

In addition to the automatic defrost cycle, a manual chamber defrost cycle can be activated when necessary.

Press key until menu item **Set chamber temperature** is displayed:

S	E	T		T	E	M	P		C	T	-	3	0	°	C
														❄	-

Press key. A brief sound signals that the manual chamber defrost cycle has started:

S	E	T		T	E	M	P		C	T	-	3	0	°	C
														❄	-

The manual defrost cycle ends either when the selected defrost cycle duration is over or when a chamber temperature of -5 °C is reached.

Go back to menu item **Set chamber temperature** and press again.

Instruments with specimen cooling:

When defrosting starts, to avoid icing the specimen head is automatically adjusted to a temperature between -10 °C and -5 °C, i.e. the set temperature value is deactivated temporarily (same as with automatic defrost cycle - see (→ p. 61 – 5.7.1 Automatic chamber defrost cycle)).

10 seconds after the manual chamber defrost cycle has been completed, the specimen head refrigeration is switched back on, cooling down to the set value.

5.7.3 Defrosting the specimen head (instruments with specimen cooling only)

To activate specimen head defrosting:

Press key until menu item **Set specimen head temperature** is displayed:

S	E	T		T	E	M	P		O	T	-	3	5	°	C
														❄	❄

Press key. A brief sound signals that the manual specimen head defrost cycle has started:

S	E	T		T	E	M	P		O	T	-	3	5	°	C
														❄	❄

Specimen head temperature increases to between +20 °C and +30 °C for a duration of 10 minutes, after which it returns to the set value.

To abort specimen head defrosting:

Press key until menu item **Set specimen head temperature** is displayed and press once more.

6. Troubleshooting, application tips

6.1 Displayed error messages

The autodiagnosis function of the Leica CM3050 S displays error messages in case of certain malfunctions.

1. Power failure

- This error message is displayed after the instrument had been disconnected from mains, either due to power failure or because the mains switch had been turned off.

C	T	-	3	0	°	C			O	T	-	3	5	°	C
		P	O	W	E	R		F	A	I	L	U	R	E	

» To acknowledge the message, press for about 5 seconds.

2. Coarse feed

- Coarse feed malfunction has occurred.

C	T	-	3	0	°	C			O	T	-	3	5	°	C
			?	?	?	?									

Note

This message is also displayed, if the coarse feed plug has not been reconnected properly after reinstallation of the microtome.

3. Temperature indications

C	T	-	#	#	°	C			O	T	-	3	5	°	C

or

C	T	-	3	0	°	C			O	T	-	#	#	°	C

If the # symbol is displayed instead of chamber or specimen temperature indication, the corresponding temperature sensor is broken or a short circuit has occurred.

4. Service

C	T	-	3	0	°	C			O	T	-	#	#	°	C
				S	E	R	V	I	C	E					

Note

This message is displayed after a certain number of operating hours to remind the user to have a preventive maintenance done by Leica Technical Service.

This message is displayed only, if the instrument is not regularly serviced by Leica Technical Service.

We recommend a service contract once the warranty period has expired! Contact your local Leica sales office for details!

If one of the error messages listed under (→ p. 64 – 2. Coarse feed), (→ p. 64 – 3. Temperature indications) and (→ p. 64 – 4. Service) is displayed, please contact Leica Technical Service.

6.1.1 Other error indications

- STOP (red) in control panel 2 is illuminated:
  - » Emergency stop button accidentally activated. Solution: Unlock.
  - » Footswitch not properly connected. Solution: Check connection - connect properly, if applicable.

6.2 Potential problems - causes and remedies

Problem	Causes	Remedies
Frost on chamber walls and microtome.	• Cryostat is exposed to draft (open windows, doors, air-conditioning). • Sliding window has been open for a long period of time at a very low chamber temperature. • Frost build-up caused by breathing into the cryochamber.	• Eliminate draft sources or change place of installation of the cryostat. • Close sliding window. • Consider wearing a mask.
Sections smear.	• Specimen not cold enough. • Knife and/or anti-roll plate not yet cold enough - sections melt.	• Select lower temperature. • Wait until knife and/or anti-roll plate have reached chamber temperature.
Sections splinter. Sections not properly flattened.	• Specimen too cold. • Static electricity/draft. • Specimen not cold enough. • Large surface specimen. • Anti-roll plate poorly adjusted. • Anti-roll plate poorly aligned relative to knife edge. • Wrong clearance angle selected. • Knife blunt or damaged.	• Select higher temperature. • Eliminate cause. • Select lower temperature. • Trim specimen parallel; increase section thickness. • Readjust anti-roll plate. • Align correctly. • Set correct clearance angle. • Use different part of knife or replace knife.

Problem	Causes	Remedies
Sections not properly flattened despite correct temperature and correctly aligned anti-roll plate.	• Knife and/or anti-roll plate dirty. • Edge of anti-roll plate damaged. • Blunt knife.	• Clean with dry cloth or brush. • Replace anti-roll plate. • Use different part of knife or replace knife.
Sections curl on anti-roll plate.	• Anti-roll plate does not protrude far enough beyond the knife edge.	• Readjust correctly.
Scraping noise during sectioning stroke and specimen return stroke.	• Anti-roll plate protrudes too far beyond the knife edge and is scraping against the specimen.	• Readjust correctly.
Undulated sections.	• Knife damaged. • Edge of anti-roll plate damaged.	• Use different part of the knife or replace knife. • Replace anti-roll plate.
Chatter marks form during sectioning.	• Specimen insufficiently frozen onto specimen disc. • Specimen disc not clamped tightly enough. • Specimen holder ball joint not clamped. • Knife not clamped tightly enough. • Selected section thickness too thick - specimen has come off the specimen disc. • Specimen very hard and inhomogeneous. • Blunt knife. • Knife profile inappropriate for the type of specimen to be sectioned. • Wrong clearance angle.	• Refreeze specimen onto disc. • Check disc clamping. • Check ball joint clamping. • Check knife clamping. • Refreeze specimen onto disc. • Increase section thickness; if possible, reduce specimen surface. • Use different part of knife or replace knife. • Use knife with a different profile. • Readjust clearance angle setting.
Condensation forms on anti-roll plate and knife during cleaning.	• Brush, forceps, cloth or other cleaning item too warm.	• Accessories and cleaning material to be used pre-cooled only. • Store on storage shelves inside the cryochamber.

Problem	Causes	Remedies
Anti-roll plate damaged after adjustment.	• Anti-roll plate protrudes too far beyond the knife edge. Adjustment was done in the direction of the knife.	• Rotate or replace anti-roll plate; in future, lift away from the knife when aligning. • Handle anti-roll plate more carefully.
Thick/thin sections.	• Wrong temperature for the tissue to be sectioned.	• Select correct temperature and/or wait until correct temperature has been reached.
	• Knife profile inappropriate for the specimen to be sectioned.	• Use knife with different profile (c or d) or possible switch to disposable blade system.
	• Ice build-up on the knife back.	• Remove ice.
	• Handwheel rotation not uniform or inappropriate rotation speed.	• Adapt speed.
	• Knife not clamped tightly enough.	• Check knife clamping.
	• Specimen disc not clamped correctly.	• Check disc clamping.
	• Tissue freezing medium poured onto cold specimen disc; specimen comes off the disc once frozen.	• Place tissue freezing medium on luke-warm specimen disc, inside the cryochamber place the specimen onto the disc and freeze in quick-freeze shelf.
	• Blunt knife.	• Use different part of knife or replace knife.
	• Incorrect clearance angle.	• Set correct clearance angle.
	• Specimen dried out.	• Prepare new specimen.
Tissue sticks to the anti-roll plate.	• Anti-roll plate too warm or incorrectly adjusted.	• Cool or readjust anti-roll plate.
	• Static electricity.	• Eliminate cause.
	• Fat on corner or edge of anti-roll plate.	• Remove fat (alcohol).
	• Knife rusty.	• Remove rust.
Flattened sections curl up as soon as anti-roll plate is lifted from the knife.	• Static electricity or draft.	• Eliminate cause.
	• Anti-roll plate too warm.	• Cool anti-roll plate.

Problem	Causes	Remedies
Sections tear.	• Temperature too low for the tissue to be sectioned. • Knife blunt, dirty, dusty, frosted or rusty. • Upper edge of anti-roll plate damaged. • Hard particles in the tissue. • Rear face of knife dirty.	• Select higher temperature and wait for the new temperature to be reached. • Eliminate cause. • Rotate or exchange anti-roll plate. • If application permits, section at lower plane. • Clean.
Inconsistent or insufficient specimen feed.	• Microtome was not completely dry when refrigeration was switched on; ice build-up inside the micrometer mechanism. • Microtome defective.	• Remove microtome from chamber and dry - possibly with hairdryer (hairdryer only to be used outside the cryochamber!) or at ambient temperature. • Call Technical Service.
Specimen disc cannot be removed.	• Specimen disc stuck to quick freeze shelf or specimen head due to moisture on underside of specimen disc.	• Apply strong alcohol to contact point or heat the specimen head.
Cryostat inoperational.	• Mains plug not properly connected. • Automatic cut-out has been triggered.	• Check mains plug connection. • Reconnect automatic cut-out (switch instrument back on).
Sectioning motor inoperational.	• Footswitch not connected. • Automatic cut-out of sectioning motor has been triggered. • Motor defective.	• Connect footswitch. • Reconnect automatic cut-out (push inwards until it locks in place). • Call Technical Service.
No or insufficient refrigerating performance.	• Rubber plug not placed properly into drain in bottom of cryo-chamber. • Compressor defective. • Leak in cooling system.	• Close drain with rubber plug. • Call Technical Service. • Call Technical Service.
Blade/Knife holder base can not be clamped tightly.	• Insufficient clamping force of the T-piece.	• Adjust the clamping force of the T-piece (→ p. 74 – 7.4.4 Adjust the clamping force of the T-piece).

6.3 Reference chart for temperature settings (in minus °C)

Tissue	10-15	15-25	25-50
Adrenal	❄	❄	
Bone marrow		❄	
Brain	❄	❄	
Bladder			❄
Breast - fatty			❄
Breast - little fat		❄	
Cartilage	❄	❄	
Cervical		❄	
Fatty			❄
Heart and vascular		❄	
Intestinal		❄	
Kidney			❄
Laryngeal		❄	
Lip		❄	❄
Liver			❄
Lung			❄
Lymphoid		❄	
Muscular		❄	
Nose			❄
Pancreatic		❄	
Prostate		❄	
Ovarian		❄	
Rectal		❄	
Skin with fat			❄
Skin without fat		❄	
Spleenal or bloody tissue	❄	❄	
Testicular	❄	❄	
Thyroid		❄	
Tongue			❄
Uterus curettage	❄		

Note

The recommended temperature settings are based on long-term experience. However, they can only be guidelines for general orientation, as each individual specimen may require particular adjustments.

7. Disinfection, cleaning and maintenance

7.1 Safety instructions on disinfection and cleaning

Warning

When disinfecting the instrument, make sure to observe the following safety instructions:

- (→ p. 19 – 2.3.10 Disinfection and cleaning)
- (→ p. 17 – 2.3.4 Handling microtome knives/blades)
- (→ p. 18 – 2.3.7 Defrosting/handling frozen tissue)
- (→ p. 18 – 2.3.8 Frozen parts of the instrument and frozen accessories)
- (→ p. 18 – 2.3.9 Infectious/radioactive material)

7.2 Cleaning

Warning

- Wear protective clothing during cleaning or disinfection work (gloves, face mask, lab coat, etc.).
- Do not use solvents (xylene, acetone etc.) for cleaning or disinfection.
- When using detergents and disinfectants, observe the specifications of the respective manufacturer.
- Risk of explosion when using alcohol: Provide proper ventilation and ensure the instrument is switched off.

Note

Remove frozen section waste from the cryostat with a cold brush daily.

When necessary, the instrument surfaces can be cleaned with mild commercial household cleaners.

Warning

Surfaces which are potentially contaminated (infectious germs) should always be cleaned with alcohol disinfectants!

7.3 Disinfection at room temperature

Warning

- For disinfection, wear protective gear (gloves, mask, lab coat etc.).
- When using detergents and disinfectants, observe the specifications of the respective manufacturer.
- Risk of explosion when using alcohol: Provide proper ventilation and ensure the instrument is switched off.
- Before switching on the instrument again, proper ventilation of the chamber shall be ensured.

1. Switch off the instrument.

2. Carefully remove knife/disposable blade as well as specimens and accessories from the chamber.
3. Remove section waste from the cryochamber and dispose of it.
4. Remove the closed sliding window from the front by gently lifiting it (→ p. 75 – 7.5 Removing the sliding window).
5. Remove microtome (→ p. 71 – 7.4.1 Removing the microtome).
6. Allow the microtome to thaw, disinfect and allow to dry thoroughly.

Note

Drying the microtome:

- Use a hairdryer (only outside of the cryochamber!): dry and before reinstalling into the chamber allow the microtome to cool down to room temperature.
- Allow to dry at room temperature (at least over night - longer, if necessary).

7. Disinfect and dry disassembled parts (accessories and tools).
8. Clean the chamber walls using a paper towel moistened with an alcohol-based disinfectant.
9. Place a suitable container underneath the drain tube (→ "Fig. 7-23") at the right side of the instrument.
10. Pull the rubber plug (→ "Fig. 7-22") out of the bottom of the chamber and drain the disinfectant into the waste container.
11. Use the rubber plug to re-seal the drain in the cryochamber.
12. Dispose of liquid according to the waste disposal regulations.
13. Allow cryochamber to dry thoroughly.
14. Reinstall microtome (→ p. 74 – 7.4.3 Reinstalling the microtome).
15. Insert the disinfected accessories and tools back into the cryochamber only once they are fully dry.
16. Reinsert the sliding window.
17. Switch the instrument back on.
18. Once a suitable cryochamber temperature has been reached, return the specimens to the cryochamber.

Note

The external waste container collects the condensate that accumulates during defrosting. Therefore, check the level regulary and empty the container according to applicable laboratory regulations.

7.4 Removing/reinstalling the microtome

7.4.1 Removing the microtome

Warning

When removing the microtome, make sure to observe the following safety instructions:

- (→ p. 19 – 2.3.11 Removing/reinstalling the microtome)
- (→ p. 18 – 2.3.7 Defrosting/handling frozen tissue)
- (→ p. 18 – 2.3.9 Infectious/radioactive material)
- (→ p. 19 – 2.3.10 Disinfection and cleaning)

Note

Prior to removing the microtome, carry out preparation steps as per chapter (→ p. 70 – 7.3 Disinfection at room temperature) (switch instrument off, remove accessories etc.).

7.4.2 Disassembling the specimen head (instruments w/specimen cooling only)

1. Use Allen key size 5 to remove screw (→ "Fig. 19-2") from the center of the specimen head (→ "Fig. 19-1").

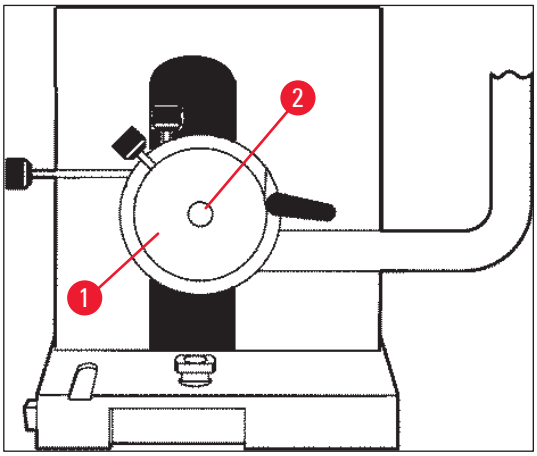

Fig. 19

2. Do not twist the refrigerating tube (→ p. 19 – 2.3.11 Removing/reinstalling the microtome).
3. Hold the specimen head fixture (→ "Fig. 20-3") (→ p. 23 – 3.4 Standard delivery) in one of your hands and with your other hand rest refrigerating tube (→ "Fig. 20-2") on the specimen head fixture.
4. Insert the specimen head fixture (→ "Fig. 20-3") with refrigerating tube (→ "Fig. 20-2") into the opening above mark (▼).

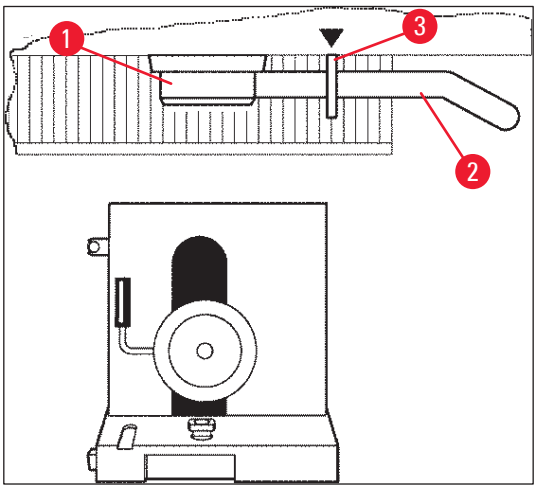

Fig. 20

5. Remove plug of temperature sensor (→ "Fig. 21-5").

Remove plug of coarse feed motor:

1. Pull bushing backward (→ "Fig. 21-1") and hold.
2. Place your thumb between plug (→ "Fig. 21-4") and socket at the microtome (→ "Fig. 21-2").
3. To remove plug (→ "Fig. 21-4") from microtome, pull it away from the microtome while at the same time carrying out a slight jogging movement (→ "Fig. 21-3").

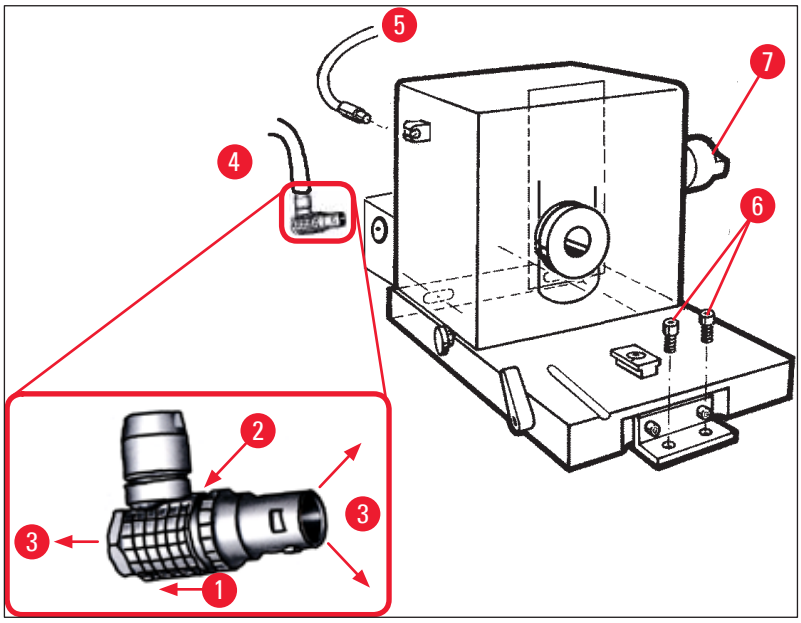

Fig. 21

4. Loosen screws (→ "Fig. 21-6") with Allen key.
5. Lift microtome a little and pull slightly to the left.
6. This loosens the plastic coupling (→ "Fig. 22-1") which connects the two axles.

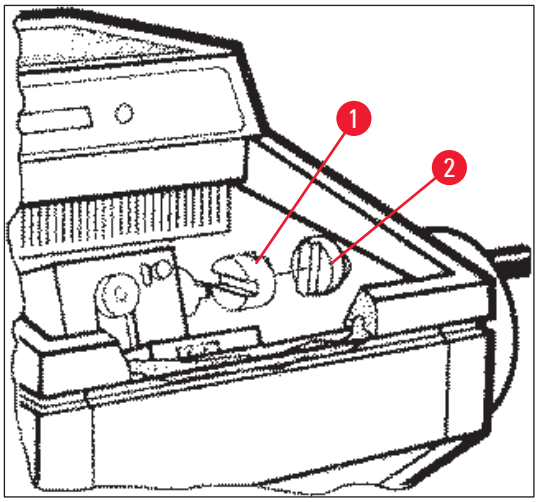

Fig. 22

✓ Remove the microtome from the chamber.

7.4.3 Reinstalling the microtome

Warning

When reinstalling the microtome, make sure to observe the following safety instructions:

- (→ p. 19 – 2.3.11 Removing/reinstalling the microtome)
- (→ p. 20 – 2.3.12 Display message dry microtome)

1. Lock handwheel in lower position.
2. Place microtome in chamber.
3. Put one drop of cryostat oil per surface on the contact surfaces of plastic coupling (→ "Fig. 22-1") and handwheel coupling (→ "Fig. 22-2").
4. Place plastic coupling (→ "Fig. 22-1") on handwheel coupling (→ "Fig. 22-2").
5. Push microtome slightly towards the right until axle (→ "Fig. 21-7") fits tightly into coupling (→ "Fig. 22-1").
6. Unlock handwheel.
7. Adjust the parts into each other by rotating the handwheel slightly backward and forth.
8. Lock handwheel again in lower position.
9. Tighten screws (→ "Fig. 21-6").
10. Reconnect plugs of coarse feed motor (→ "Fig. 21-4") and temperature sensor (→ "Fig. 21-5").
11. Mount specimen head (in reverse order as described on previous page).
12. Insert accessories (storage shelf, section waste tray etc.).
13. Insert sliding window.
14. Connect instrument to mains and switch back on.

7.4.4 Adjust the clamping force of the T-piece

To ensure a proper sectioning result, the knife holder base (→ "Fig. 23-1") must be securely clamped onto the base plate (→ "Fig. 23-2").

The clamping is carried out using an eccentric lever (→ "Fig. 23-3"). The clamping force is adjusted with the setscrew (→ "Fig. 23-4") on the upperside of the T-piece. The setting of the clamping is carried out so that the clamping lever can be rotated to the stop with constantly increasing resistance.

To set the clamping distance from the eccentric bolt to approx. 200 °, do the following steps.

1. Remove the knife holder base from the base plate.
2. Adjust by screwing clockwise or counterclockwise the countersunk screw (→ "Fig. 23-5") in the clamping piece in the base using the Allen key No. 4, so that the eccentric lever (→ "Fig. 23-3") can be clamped at 0 ° position and 200 ° position.

✓ Repeat this procedure until the knife holder base is securely clamped and not moving.

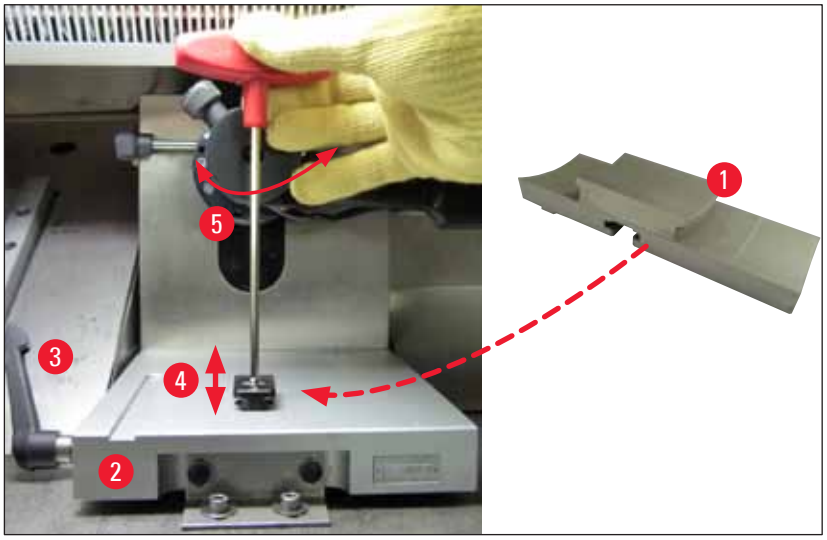

Fig. 23

7.5 Removing the sliding window

1. Switch off the instrument at the circuit breaker.
2. Disconnect the power plug.
3. Slightly lift the sliding window (→ "Fig. 24-1") holding it by the grip (→ "Fig. 24-2") and pull it out to the front.
4. Carry out disinfection/cleaning tasks.
5. Reinsert the sliding window.
6. Connect the instrument to the power supply again and switch it on.

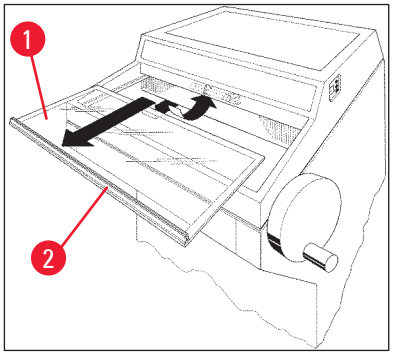

Fig. 24

7.6 Replacement of LED illumination

The LED illumination is designed for maximum life span. In case of damage, please contact Leica customer service to arrange replacement. For further details, see (→ p. 76 – 8. Warranty and service).

8. Warranty and service

Warranty

Leica Biosystems Nussloch GmbH guarantees that the contractual product delivered has been subjected to a comprehensive quality control procedure based on the Leica in-house testing standards, and that the product is faultless and complies with all technical specifications and/or agreed characteristics warranted.

The scope of the warranty is based on the content of the concluded agreement. The warranty terms of your Leica sales organization or the organization from which you have purchased the contractual product shall apply exclusively.

Technical service information

If you require technical service or replacement parts, please contact your Leica sales representative or dealer who sold the product.

Please provide the following information:

- Model name and serial number of the instrument.
- Location of the instrument and name of the person to contact.
- Reason for the service call.
- Date of delivery.

Decommissioning and disposal

The instrument or parts of the instrument must be disposed of in compliance with the local laws.

9. Appendix

9.1 Electrohydraulic height adjustment

An electrohydraulic lifting device for individual working height adjustment is available as an optional accessory for the Leica CM3050 S cryostat series.

9.1.1 Designated use

The electrohydraulic height adjustment device has been designed exclusively for adjustment of the instrument working level to the individual height of the user.

It has been designed for use with the Leica cryostat series Leica CM3050 S only and may under no circumstances be used to lift other instruments or persons.

Damage resulting from improper use of the product and/or faulty operation invalidates the warranty.

Leica will not assume liability for any such damage.

9.1.2 Standard delivery

Electrohydraulic height adjustment device for cryostat series Leica CM3050 S, complete outfit, consisting of a U-shaped frame on four height-adjustable feet and a two-key control unit.

The height adjustment device is available in 2 voltages:

1. 230 – 240 V/50 Hz – order no. 14 0443 26147

2. 100 – 115 V/60 Hz – order no. 14 0443 26148

9.1.3 Safety instruction

Prior to operating the height adjustment device, make sure to read the present Instructions for Use. Pay special attention to the following safety instructions:

Warning

Prior to connecting the height adjustment device to mains, check to make sure that the nominal voltage and frequency indications on the device name plate correspond to the actual mains voltage in your lab!

Do not move the height adjustment device with the Leica CM3050 S installed on the frame. If the place of installation needs to be changed, first take the Leica CM3050 S down from the height adjustment device and then move both devices separately.

Never place your feet underneath the U-frame when lowering the height adjustment device. Risk of injury!

Only authorized Leica technical service engineers may carry out repairs on both the Leica CM3050 S and the height adjustment device. This applies especially to all work carried out on the hydraulic system of the height adjustment device.

9.1.4 Installation

1. Open the shipping box and remove all packing material including the Styrofoam pieces.
2. Take the height adjustment device out of the box.
3. At the place of installation, place the U-frame on the floor with the open side facing yourself. Adjust the U-frame parallel to the wall, maintaining a distance of approx. 10 cm between wall and U-frame.
4. Plug the height adjustment device into the mains socket.
5. Lower the height adjustment device to the lowest possible position.
6. In order to move the Leica CM3050 S, screw in both adjustable feet (→ "Fig. 3-2") with a fork wrench.
7. Roll the Leica CM3050 S onto the U-frame as far as it will go.

Note

The rear of the Leica CM3050 S housing has to fit closely to the rear bar of the U-frame.

Warning

When placing the instrument onto the U-frame, make sure the power cord does not get caught and thus crushed between U-frame and cryostat housing.

✓ The electrohydraulic height adjustment is now ready for use.

Fig. 25

9.1.5 Control keys

The control keys are located on top of the control unit (→ "Fig. 26").

- To lift the instrument, press ↑ (→ "Fig. 26-1").
- To lower the instrument, press ↓ (→ "Fig. 26-2").

As long as a button is held, the instrument will go up or down until reaching the upper or lower limit.

Fig. 26

9.1.6 Maintenance and care

- Protect the lifting pistons in the four legs of the height adjustment device against dust and water.
- Approximately every six months lubricate the legs with a thin coat of resin-free oil.
- Once every year have the height adjustment device checked by an authorized Leica service engineer.

9.1.7 Troubleshooting

- Slight and uniform loss of height of the device in the course of several weeks is normal.

Remedy:

» Correct the loss of height by pressing the button until the instrument is lifted back up to the desired working level.

- The cryostat is in an inclined position due to an uneven upward movement of the lifting pistons. Difference of level among the four legs > 5 mm.

Remedy:

» Have the instrument travel once up and down over the entire height adjustment distance: press

until the instrument reaches the upper limit position and then until the instrument reaches the lowest possible position. Then lift the instrument back to regular working height.

ⓘ Should the problem reoccur several times, call Leica Technical Service.

- The height adjustment device does not reach the maximum upper level or the instrument lowers itself by a relatively large distance (> 5 cm) within a short time.

Remedy:

ⓘ Call Leica Technical Service.

9.1.8 Technical data

Nominal voltage:	230-240 V	100-115 V
Nominal frequenzy:	50 Hz	60 Hz
Type of actuation:	Elektrohydraulik	
Total height of stroke:	230 mm	
Carrying power:	200 kp	
Dimensions:		
Width:	880 mm (without control unit)/1030 mm (with control unit)	
Depth:	555 mm	
Weight	approx. 30 kg	

9.2 Ordering information - accessories

Description	Order Number
Knife holder base	14 0419 26140
Knife holder CN	14 0419 33993
Knife support	14 0419 19426
Knife support for knife holder CN	14 0419 19427
Anti-roll plate, assy., 50 mm	14 0419 33981
Anti-roll plate, glass, 50 mm	14 0419 33816
Knife holder CE low prof	14 0419 33990
Knife holder CE high prof	14 0419 33991
Knife holder CE	14 0419 33992
Pressure plate rear HP, 22 °	14 0502 29553
Pressure plate rear LP, 22 °	14 0502 29551
Anti-roll plate, assy. 70 mm, 100 µm	14 0419 33980
Anti-roll plate, assy. 70 mm, 50 µm	14 0419 37258
Anti-roll plate, assy. 70 mm, 150 µm	14 0419 37260
Anti-roll plate, glass, 70 mm	14 0419 33813
Anti-roll plate, glass, 70 mm, tilting	14 0419 35693
Knife holder CE-TC	14 0419 32073
Specimen disc, 20 mm	14 0370 08636
Specimen disc, 25 mm	14 0416 19275
Specimen disc, 30 mm	14 0370 08587

Description	Order Number
Specimen disc, 40 mm	14 0370 08637
Specimen disc, 55 mm	14 0419 26491
Specimen stage	14 0419 26750
Transfer block	14 0416 38207
Heat extractor - mobile	14 0443 26836
Thermal block	14 0398 18542
90 ° prism	14 0443 25949
Anti-static kit low-prof.	14 0800 37739
Anti-static kit high-prof.	14 0800 37740
Height adjustment module Leica CM3050 S, 100-115 V/100-120 V/50 Hz	14 0443 26148
Height adjustment module Leica CM3050 S, 230/240-250 V/50-60 Hz	14 0443 26147
Dr.Peters Cryoembedding systems	
Case with cryoembedding system	14 0201 40670
Cryoembedding system	14 0201 39115
Embedding well bar set with small recesses, 18 mm	14 0201 39116
Embedding well bar set with medium-sized recesses, 24 mm	14 0201 39117
Embedding well bar set with large recesses, 30 mm	14 0201 39118
Freezing stage/heat extractor set, elevated	14 0201 39119
Embedding well bar, 4x18 mm	14 0201 39120
Embedding well bar, 4x24 mm	14 0201 39121
Embedding well bar, 3x30 mm	14 0201 39122
Specimen stage, rectangular, 28 mm	14 0201 39123
Specimen stage, rectangular, 36 mm	14 0201 39124
Heat extractor	14 0201 39125
Container for specimen stages	14 0201 39126
Dispensing slides for Dr. Peters' cryoembedding system, pack of 8	14 0201 39127
Easy Dip staining container, white, 6 pcs. per package	14 0712 40150
Easy Dip staining container, pink, 6 pcs. per package	14 0712 40151
Easy Dip staining container, green, 6 pcs. per package	14 0712 40152
Easy Dip staining container, yellow, 6 pcs. per package	14 0712 40153
Easy Dip staining container, blue, 6 pcs. per package	14 0712 40154
Easy Dip staining rack, grey	14 0712 40161
Safety gloves, size S	14 0340 40859
Safety gloves, size M	14 0340 29011
Tissue freezing medium, 125 ml	14 0201 08926
Cryo oil	14 0336 06100

10. Decontamination Certificate

Any product that is to be returned to Leica Biosystems or serviced on site must be properly cleaned and decontaminated. The associated decontamination certificate template can be found on our website www.LeicaBiosystems.com in the product menu. This template must be used to record all required data.

If a product is returned, a copy of the completed and signed decontamination certificate must either be enclosed or handed over to a service technician. The user shall be responsible for products that are returned without a completed decontamination certificate or with a missing decontamination certificate. Return shipments that are classified by the company as a potential hazard source will be returned to sender at his/her own expense and risk.

www.LeicaBiosystems.com

Version 2.3, Revision M - 02.2021

Leica Biosystems Nussloch GmbH
Heidelberger Strasse 17 - 19
69226 Nussloch
Germany

Tel.: +49 - (0) 6224 - 143 0
Fax: +49 - (0) 6224 - 143 268
Web: www.LeicaBiosystems.com